Division of Planning and Permitting
Department of Development
Review Engineering

APPROVED: 06/08/22

Signature:

NEW CREAMERY ROAD SEWAGE PUMP STATION
TOWN OF EMMITSBURG, MARYLAND

MDE NOTES – NOI REQUIREMENTS:

1. SOIL EROSION AND SEDIMENT CONTROL – THIS PROJECT HAS BEEN DESIGNED TO MINIMIZE DISTURBANCE AND MAXIMIZE THE AMOUNT OF GREEN SPACE.
2. ESD DOCUMENTATION AND DESIGN – ALL ESD DOCUMENTATION IS AVAILABLE AND THE DESIGN IS IN ACCORDANCE WITH BEST MANAGEMENT PRACTICES.
3. PROTECTION OF NATURAL AREAS – SILT FENCE WILL BE INSTALLED AT THE ONSET OF CONSTRUCTION ACTIVITIES. THE PUMPING STATION IS ALSO ENCLOSED BY A FENCE WHICH WILL MAINTAIN THE LIMIT OF DISTURBANCE.
4. CONSTRUCTION EQUIPMENT CONTROL – THE CONSTRUCTION EQUIPMENT WILL BE LIMITED TO THE CONSTRUCTION AREA BY SILT FENCE AND THE PROPERTY FENCE.
5. SITE CLEARING EVALUATION – SITE CLEARING WILL BE LIMITED TO THE LIMIT OF DISTURBANCE WHICH HAS A FENCE AND SILT FENCE/FILTER LOG PERIMETER.
6. PHASING FOR SITE AREA – THE PROPOSED WORK HAS BEEN PROPERLY SEQUENCED BY THESE PLANS FOR ALL WORK TO BE COMPLETED IN PROPER ORDER.
7. HIGH RISK SOIL IDENTIFICATION – THERE ARE NO HIGH RISK SOILS WITHIN THE LIMIT OF DISTURBANCE.
8. STEEP SLOPES – NO EXCESSIVELY STEEP SLOPES EXIST ON SITE.
9. DESIGNATION OF STABILIZATION – STABILIZE ALL DISTURBED AREA IN ACCORDANCE WITH THE NOTES PROVIDED ON SHEETS SC1 AND SC2.

STANDARD COUNTY NOTES:

1. A COMPLETE SET OF APPROVED PLANS AND A COPY OF THE GRADING PERMIT MUST BE ON SITE AND AVAILABLE FOR USE BY THE INSPECTOR, OR OTHER REPRESENTATIVES OF TOWN OF EMMITSBURG DIVISION OF PUBLIC WORKS.
2. THIS PROJECT WILL REQUIRE A THIRD PARTY QUALIFIED PROFESSIONAL TO BE PRESENT AT THE PRE-CONSTRUCTION MEETING SCHEDULED WITH TOWN OF EMMITSBURG PUBLIC WORKS AND THE FREDERICK COUNTY ENVIRONMENTAL COMPLIANCE SECTION.
3. ALL GRADING FOR THIS PROJECT SHALL BE THE FULL RESPONSIBILITY OF THE PROJECT OWNER.

ENGINEER/ARCHITECT DESIGN CERTIFICATION

I HEREBY CERTIFY THAT THE PLANS HAVE BEEN DESIGNED IN ACCORDANCE WITH LOCAL ORDINANCES, COMAR 26.17.01, AND 2011 MARYLAND STANDARDS AND SPECIFICATIONS FOR SOIL EROSION AND SEDIMENT CONTROL.

SIGNATURE	REGISTRATION NUMBER	DATE
	22765	3/7/22

FREDERICK SOIL CONSERVATION DISTRICT
SOIL EROSION AND SEDIMENT CONTROL PLAN APPROVAL

BY: _____

DATE: 5-10-22

SCD APPROVAL FOR SEDIMENT AND EROSION CONTROL IS CONTINGENT UPON ISSUANCE OF ALL APPLICABLE REGULATORY PERMITS.

OWNER/DEVELOPER

I CERTIFY THAT THIS PLAN OF SEDIMENT CONTROL WILL BE IMPLEMENTED TO THE FULLEST EXTENT, AND ALL STRUCTURES WILL BE INSTALLED TO THE DESIGN AND SPECIFICATIONS AS SPELLED OUT IN THIS PLAN AND THAT ANY RESPONSIBLE PERSONNEL INVOLVED IN THE CONSTRUCTION PROJECT WILL HAVE A CERTIFICATION OF ATTENDANCE AT A DEPARTMENT OF ENVIRONMENT APPROVED TRAINING PROGRAM FOR THE CONTROL OF SEDIMENT AND EROSION BEFORE BEGINNING THE PROJECT. I ALSO AUTHORIZE PERIODIC ON-SITE EVALUATION BY CATOCTIN/FREDERICK SOIL CONSERVATION DISTRICTS PERSONNEL AND COOPERATING AGENCIES.

OWNER/DEVELOPER	DATE
	3/7/22

APPROVED
EMMITSBURG MAYOR

MAYOR SIGNATURE	DATE
	3/7/22

APPROVED
EMMITSBURG PLANNING COMMISSION

CHAIRMAN SIGNATURE	DATE
	3/8/22

CERTIFICATION OF COMPLIANCE WITH SEISMIC CODES AND STANDARDS

PROJECT NAME: NEW CREAMERY ROAD SEWAGE PUMP STATION
OWNER NAME: TOWN OF EMMITSBURG, MARYLAND
NEW STRUCTURE(S): NEW CREAMERY ROAD PUMP STATION
MODEL CODE/STANDARD AND DATE: INTERNATIONAL BUILDING CODE 2018 AND ASCE 7-16
SEISMIC USE GROUP: SEISMIC DESIGN CATEGORY – B
SEISMIC FACTOR: SEISMIC RISK CATEGORY – III

THE ABOVE LISTED STRUCTURES HAVE BEEN DESIGNED IN ACCORDANCE WITH RURAL DEVELOPMENT IMPLEMENTING REGULATIONS 7 CFR PART 1972, SUBPART C.

SIGNATURE
DATE: 01/25/2023
TYPED NAME: BRENT TRIMBLE
TITLE: SENIOR PROJECT DELIVERY LEADER

STATE OF MARYLAND – BRENT E. TRIMBLE – No. 23928 – PROFESSIONAL ENGINEER

ALL DIMENSIONS AND EXISTING CONDITIONS
SHALL BE CHECKED AND VERIFIED BY THE CONTRACTOR AT THE SITE.

GOOGLE EARTH
IMAGERY: 2022 MAXAR TECHNOLOGIES, US GEOLOGICAL SURVEY, USDA/FPAC/GEO
MAP DATA: 2022

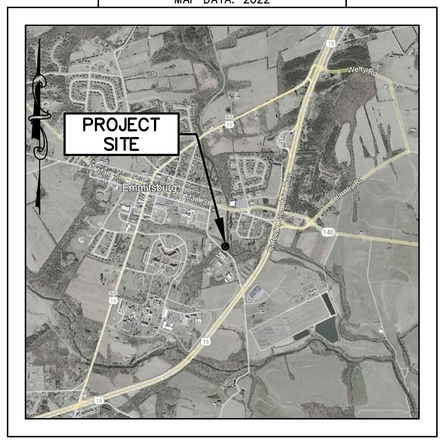

VICINITY MAP
SCALE: 1"=2,000'

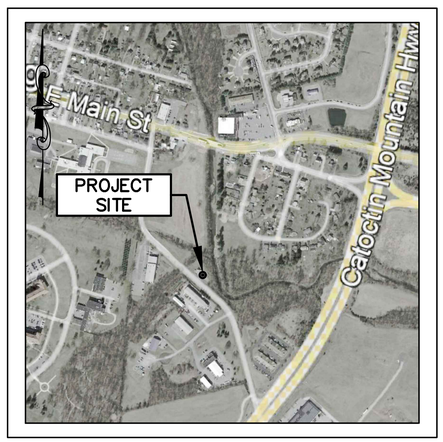

LOCATION MAP
SCALE: 1"=600'

SHEET INDEX

SHEET NO.	RK&K DWG. NO.	TITLE
1	G1	TITLE SHEET
2	G2	ABBREVIATIONS AND LEGEND
3	G3	GENERAL NOTES AND SYSTEM CURVE
4	C1	EXISTING PROPERTY PLAN
5	C2	SITE DEMOLITION PLAN
6	C3	GRADING AND SITE IMPROVEMENT PLAN
7	C4	MISCELLANEOUS SITE DETAILS
8	C5	MISCELLANEOUS SITE DETAILS
9	C6	SITE DETAIL
10	C7	FORCE MAIN VALVE VAULT IMPROVEMENTS
11	SWM1	STORMWATER MANAGEMENT PLAN
12	SWM2	STORMWATER MANAGEMENT PLAN
13	SWM3	STORMWATER MANAGEMENT PLAN
14	SC1	GRADING AND SEDIMENT CONTROL NOTES
15	SC2	GRADING AND SEDIMENT CONTROL NOTES
16	SC3	GRADING AND SEDIMENT CONTROL DETAILS
17	SC4	GRADING AND SEDIMENT CONTROL DETAILS
18	SC5	GRADING AND SEDIMENT CONTROL PLANS – EXISTING SITE
19	SC6	GRADING AND SEDIMENT CONTROL PLAN – PROPOSED SITE
20	SC7	OVERALL GRADING AND SEDIMENT CONTROL PLAN – PROPOSED SITE
21	M1	MECHANICAL DEMOLITION PLAN – GRADE LEVEL
22	M2	MECHANICAL DEMOLITION PLAN – INTERMEDIATE LEVEL
23	M3	MECHANICAL DEMOLITION SECTIONS 1 & 2
24	M4	MECHANICAL DEMOLITION SECTIONS 3 & 4
25	M5	MECHANICAL IMPROVEMENT PLAN – GRADE LEVEL
26	M6	MECHANICAL IMPROVEMENT PLAN – INTERMEDIATE LEVEL
27	M7	MECHANICAL IMPROVEMENT SECTION 1
28	M8	MECHANICAL IMPROVEMENT SECTION 2
29	M9	MECHANICAL SCHEDULES AND DETAILS
30	M10	MECHANICAL DETAILS
31	S1	STRUCTURAL NOTES
32	S2	STRUCTURAL NOTES
33	S3	PRECAST CONCRETE BUILDING PLAN AND LOUVER AND DOOR SCHEDULE AND DETAILS
34	S4	PRECAST CONCRETE BUILDING ELEVATIONS AND DETAILS
35	S5	STRUCTURAL PLAN – GRADE LEVEL
36	S6	STRUCTURAL PLAN – INTERMEDIATE LEVEL
37	S7	STRUCTURAL SECTION 1
38	S8	STRUCTURAL SCHEDULES AND DETAILS
39	S9	STRUCTURAL DETAILS
40	S10	STRUCTURAL DETAILS
41	E1	ELECTRICAL ABBREVIATIONS, SYMBOLS, AND NOTES
42	E2	ELECTRICAL SITE PLAN
43	E3	DUCT BANK CROSS SECTIONS AND CONDUIT SCHEDULE
44	E4	PUMP STATION LIGHTING PLAN
45	E5	PUMP STATION–GRADE LEVEL POWER PLAN
46	E6	PUMP STATION–INTERMEDIATE LEVEL POWER PLAN
47	E7	PUMP STATION RECEPTACLE AND HVAC ELECTRICAL PLAN
48	E8	PUMP STATION DISCHARGE FLOW METER VAULT ELECTRICAL PLAN
49	E9	ELECTRICAL DETAILS
50	PCS1	PUMP CONTROL SYSTEM ABBREVIATIONS, SYMBOLS, AND LEGEND
51	PCS2	PLC ARCHITECTURE
52	PCS3	MCC–C ELEVATION
53	PCS4	MCC–C ONE–LINE DIAGRAM
54	PCS5	MCC–C CONTROL WIRING DIAGRAMS
55	PCS6	MCC–C CONTROL WIRING DIAGRAMS
56	PCS7	PUMP STATION CONTROL PANEL
57	PCS8	PUMP STATION CONTROL PANEL WIRING DIAGRAM
58	PCS9	PUMP STATION CONTROL PANEL WIRING DIAGRAM
59	PCS10	PUMP STATION CONTROL PANEL WIRING DIAGRAM
60	PCS11	PUMP STATION CONTROL PANEL WIRING DIAGRAM

SITE SWM SUMMARY TABLE

SITE AREA	AC	0.29
DISTURBANCE AREA	AC	0.16
EXISTING IMPERVIOUS	AC	0.13
PROPOSED IMPERVIOUS	AC	0.13
TOTAL IMPERVIOUS	AC	0.13
SITE Pe	INCHES	1.0
DEVELOPMENT TYPE	REDEVELOPMENT	
ESDv REQUIRED	CF	227
ESDv PROVIDED	CF	240

ESD Practices (Chapter 5 – Structure & Non-Structural)

TYPE	NO.	DA (ACRES) (To Structure)	IMPERVIOUS DA (ACRES) (To Structure)	TARGET Pe (INCHES)	PROVIDED Pe (INCHES)	ESDv REQUIRED	ESDv PROVIDED	WQv (CF)	CPv (CF)	CPv (cfs) (Discharge)	Rev (CF)	TIME OF CONCENTRATION	Q10 (CFS)
BIORETENTION	1	0.287	0.131	1.0	1.0	227	240	240	N/A	N/A	N/A	N/A	N/A

DISTURBED AREA QUANTITY

THE TOTAL AREA TO BE DISTURBED SHOWN ON THESE PLANS HAS BEEN DETERMINED TO BE APPROXIMATELY 0.16 ACRES AND THE TOTAL AMOUNT OF EXCAVATION AND FILL SHOWN ON THESE PLANS HAS BEEN DETERMINED TO BE APPROXIMATELY 11,716 CU. YDS. OF EXCAVATION AND APPROXIMATELY 1,312 CU. YDS. OF FILL.

1"=600' 600' 300' 0 600' 1200'

1"=2,000' 2,000' 1,000' 0 2,000' 4,000'

STATE OF MARYLAND – MARK A. GOODWIN – No. 21202 – PROFESSIONAL ENGINEER – 01/25/2023

PROFESSIONAL CERTIFICATION

I HEREBY CERTIFY THAT THESE DOCUMENTS WERE PREPARED OR APPROVED BY ME, AND THAT I AM A DULY LICENSED PROFESSIONAL ENGINEER UNDER THE LAWS OF THE STATE OF MARYLAND. LICENSE NO. 22765 EXPIRATION DATE 07/09/2024

RK&K
700 EAST PRATT STREET, SUITE 500
BALTIMORE, MARYLAND 21202
800.787.3755

NO.	DESCRIPTION	BY	DATE
	REVISIONS		

TOWN OF EMMITSBURG, MARYLAND
NEW CREAMERY ROAD SEWAGE PUMP STATION
EMMITSBURG, MARYLAND

TITLE SHEET

ENGINEER	CHECKED BY
JSG	RAL
DRAWN BY	DATE
JAB	1/2023
RK&K PROJECT NUMBER	
19082	

DRAWING NUMBER
G1

SHEET NO. 1 OF 60

RK&K 21.SYS – C:\Users\tutere\appdata\Local\Temp\AcePublish_33\DB\19082525-001-cDP-01.dwg Jan 27, 2023 – 9:18am Plot Scale 1:1

Division of Planning and Permitting
Department of Development
Review Engineering
APPROVED: 06/0?/22
Signature:

ABBREVIATIONS

AB	ANCHOR BOLT
ABAN	ABANDONED
Ac.	ACRE
ADJ	ADJUSTABLE, ADJACENT
AFF	ABOVE FINISHED FLOOR
ALT	ALTERNATE, ALTERNATIVE
ALUM	ALUMINUM
ANC	ANCHOR
APPROX	APPROXIMATE
ARCH	ARCHITECTURAL
ARV	AIR RELEASE VALVE
ASSY	ASSEMBLY
ATS	AUTOMATIC TRANSFER SWITCH
AUTO	AUTOMATIC
AUX	AUXILIARY
AWG	AMERICAN WIRE GAUGE
B	BEAM, BORING
BTOB	BACK TO BACK
BF	BLIND FLANGE
BHP	BRAKE HORSEPOWER
BITUM	BITUMINOUS
BK	BACK
BLDG	BUILDING
BLK	BLOCK
BLKG	BLOCKING
BLT(S)	BOLT(S)
BM	BENCHMARK
BMP	BEST MANAGEMENT PRACTICES
BOF	BOTTOM OF FOOTING
BOT	BOTTOM
BRG	BEARING
BRK	BRICK
BS	BOTH SIDES
BSMT	BASEMENT
B&S	BELL AND SPIGOT
BTU	BRITISH THERMAL UNIT
BTUH	BRITISH THERMAL UNIT–HOUR
BTWN	BETWEEN
CAV	COMBINATION AIR VALVE
C/EJ	CONTRACTION/EXPANSION JOINT
C/M	CIVIL/MECHANICAL
CFM	CUBIC FEET PER MINUTE
C&G	CURB AND GUTTER
CHB	CHORD BEARING
CHKD	CHECKERED
CHKDPL	CHECKERED PLATE
CHL	CHORD LENGTH
CI	CAST IRON
CIMH	CAST IRON MANHOLE
CIMHS	CAST IRON MANHOLE STEPS
CIP	CAST IRON PIPE
C.I.P.	CAST IN PLACE
CISP	CAST IRON SOIL PIPE
CJ	CONTRACTION JOINT
CJT	CONTROL JOINT
CL	CLASS, CLEARANCE, CLEAR
CLG	CEILING
CLR	CLEAR, CLEARANCE
CMP	CORRUGATED METAL PIPE
CMU	CONCRETE MASONRY UNIT
CO	CLEAN OUT, COMPANY
COL	COLUMN
COMB	COMBINATION
COMP	COMPRESSOR, COMPRESSED
CONC	CONCRETE
CONN	CONNECTION
CONST	CONSTRUCTION
CONT	CONTINUOUS, CONTINUATION, CONTROL
COR	CORNER
CORR	CORRIDOR, CORRUGATED
COV	COVER
CPLG	COUPLING
CRS	COURSES, CORROSION–RESISTANT STEEL
CSJ	CONSTRUCTION JOINT
CSK	COUNTERSUNK
CTOC	CENTER TO CENTER
CTR(S)	CENTER(S)
CU	CUBIC
CV	CHECK VALVE
CUYD	CUBIC YARD
D	DOOR, DRAIN, DAMPER
DBL	DOUBLE
DEG	DEGREE
DEPT	DEPARTMENT
DH	DOOR HEIGHT
DI	DROP INLET, DUCTILE IRON
DIA	DIAMETER
DIM	DIMENSION
DIP	DUCTILE IRON PIPE
DISCH	DISCHARGE
DIV	DIVISION
DN	DOWN
DO	DOOR OPENING
DPR	DAMPER
DR	DRAIN
DS	DOWNSPOUT
DWG(S)	DRAWING(S)
DWL(S)	DOWEL(S)

ABBREVIATIONS (CONTINUED)

E	EAST
EA	EACH
ECC	ECCENTRIC
EF	EACH FACE, EXHAUST FAN
EJ	EXPANSION JOINT
EL	ELEVATION
ELEV	ELEVATION
ELL	ELBOW
EMER	EMERGENCY
ENCL	ENCLOSURE
ENT	ENTRANCE
EOP	EDGE OF PAVEMENT
EP	ELECTRIC POLE
EQ	EQUAL
EQUIP	EQUIPMENT
EW	EACH WAY
EWEF	EACH WAY EACH FACE
EXH	EXHAUST
EX	EXISTING
EXP	EXPANSION, EXPOSED
EXPJT	EXPANSION JOINT
EXT	EXTENSION, EXTERIOR, EXTERNAL
FB	FACE BRICK
FCA	FLANGED COUPLING ADAPTER
FCO	FLOOR CLEANOUT
FD	FLOOR DRAIN
FE	FIRE EXTINGUISHER
FEC	FIRE EXTINGUISHER CABINET
FF	FINISHED FLOOR
FTOF	FACE TO FACE
FIG	FIGURE
FIN	FINISH
FINGR	FINISH GRADE
FL	FLOOR, FLOW LINE
FLASH	FLASHING
FLEX	FLEXIBLE
FLG	FLANGE, FLASHING
FM	FORCE MAIN, FLOW METER
FND	FOUNDATION
FOM	FACE OF MASONRY
FRP	FIBERGLASS REINFORCED PLASTIC OR POLYESTER
FT	FEET, FOOT
FTG	FOOTING
FWD	FORWARD
F&F	FLANGE & FLARE
GA	GAUGE
GAB	GRADED AGGREGATE BASE
GAL	GALLON
GALV	GALVANIZED
GEN	GENERAL, GENERATOR
GPM	GALLONS PER MINUTE
GR	GRADE
GV	GATE VALVE, GRAVITY VENTILATOR
GWB	GYPSUM WALLBOARD
GYP	GYPSUM
H	ACCESS HATCH
HA	HYDRAULIC ACTUATOR
HALCP	HYDRAULIC ACTUATOR LOCAL CONTROL PANEL
HAMCP	HYDRAULIC ACTUATOR MAIN CONTROL PANEL
HB	HOSE BIBB
HD	HEAD
HF	HOSE FAUCET
HGT	HEIGHT
HLU	HAND LAY–UP
HMA	HOT MIX ASPHALT
HMC	HARNESSED MECHANICAL COUPLING
HMJ	HARNESSED MECHANICAL JOINT
HOA	HAND OFF AUTO
HORZ	HORIZONTAL
HP	HIGH POINT, HORSEPOWER
HR	HOUR, HANDRAIL
HSS	HOLLOW STRUCTURAL STEEL
HV	HOSE VALVE
HVAC	HEATING, VENTILATING AND AIR CONDITIONING
HW	HOT WATER
HWY	HIGHWAY
ID	INSIDE DIAMETER, INLET DAMPER
IF	INSIDE FACE
IN	INCH, INCHES
INC	INCORPORATED
INCL	INCLUDING
INCR	INCREASE, INCREASING, INCREASER
INSUL	INSULATE, INSULATION, INSULATING
INV	INVERT
K	KIPS
KSI	KIPS PER SQUARE INCH
KW	KILOWATT
KWH	KILOWATT HOUR
L	LOUVER, LENGTH
LB(S)	POUND(S)
LF	LINEAR FEET
LG	LENGTH, LONG
LIC	LICENSE
LIN	LINEAL, LINEAR
LO	LOUVER OPENING
LOC	LIMIT OF CONTRACT
LP	LOW POINT, LIGHT POLE

ABBREVIATIONS (CONTINUED)

M	MOTOR
MAN	MANUAL
MAS	MASONRY
MATL	MATERIAL
MAX	MAXIMUM
MC	MECHANICAL COUPLING
MCC	MOTOR CONTROL CENTER
MECH	MECHANICAL
MED	MEDIUM
MFR(S)	MANUFACTURER(S)
MG	MILLION GALLONS
MGD	MILLION GALLONS PER DAY
MH	MANHOLE
MIN	MINIMUM, MINUTE
MISC	MISCELLANEOUS
MJ	MECHANICAL JOINT
MJRG	MECHANICAL JOINT RETAINER GLAND
MJTR	MECHANICAL JOINT WITH TIE ROD
MK	MARK NUMBER
MO	MASONRY OPENING, MOTOR OPERATED
MTL	MATERIAL
MVMCC	MEDIUM VOLTAGE MOTOR CONTROL CENTER
N	NORTH
NA	NOT APPLICABLE
NC	NORMALLY CLOSED
N.I.C	NOT IN CONTRACT
NO	NORMALLY OPEN
NO.(S)	NUMBER(S)
NOM	NOMINAL
NPT	NATIONAL PIPE THREAD
NPW	NONPOTABLE WATER
NTS	NOT TO SCALE
OC	ON CENTER
OH	OVERHEAD
OPER	OPERATING
OPNG	OPENING
OPP	OPPOSITE, OPPOSING
P	PUMP
PAV	PAVEMENT
PCCP	PRESTRESSED CONCRETE CYLINDER PIPE
PCF	POUNDS PER CUBIC FOOT
PE	PLAIN END
PH	PIPE HANGER
PK	PK NAIL
PL	PLATE
PLYWD	PLYWOOD
PNL(S)	PANEL(S)
POL	POINT ON LINE
PR	PAIR
PREFAB	PREFABRICATED
PROP	PROPOSED
PS	PIPE SUPPORT
PSF	POUNDS PER SQUARE FOOT
PSI	POUNDS PER SQUARE INCH
PT	POINT
PVC	POLYVINYL CHLORIDE
P.V.C	POINT OF VERTICAL CURVE
P.V.I	POINT OF VERTICAL INTERSECTION
P.V.T	POINT OF VERTICAL TANGENT
PW	POTABLE WATER
QTR	QUARTER
R	RADIUS, RISER
R&C	REBAR AND CAP
RCP	REINFORCED CONCRETE PIPE
RCCP	REINFORCED CONCRETE CYLINDER PIPE
RED	REDUCER, REDUCING
REF	REFERENCE
REINF	REINFORCED, REINFORCING
REM	REMOVABLE
REQD	REQUIRED
REV	REVISION, REVISED
RFF	REINFORCED FABRIC FENCE
RG	RETAINER GLAND
RM	ROOM
ROP	ROCK OUTLET PROTECTION
ROW	RIGHT–OF–WAY
RPM	REVOLUTIONS PER MINUTE
R/W	RIGHT–OF–WAY
S	SOUTH, SPEAKER
SAN	SANITARY
SCADA	SUPERVISORY CONTROL AND DATA ACQUISITION
SCE	STABILIZED CONSTRUCTION ENTRANCE
SCH	SCHEDULE
SD	STORM DRAIN
SEC	SECOND
SECT	SECTION
SF	SQUARE FOOT, SUPPLY FAN
SG	SLUICE GATE
SHT	SHEET
SIM	SIMILAR
SPA	SPACING, SPACES
SPEC(S)	SPECIFICATION(S)
SQ	SQUARE
SS	STAINLESS STEEL, SANITARY SEWER
STA	STATION
STD	STANDARD
STL	STEEL
STOR	STORAGE

ABBREVIATIONS (CONTINUED)

STR	STRUCTURAL
SUP	SUPPLY
SUSP	SUSPENDED
SV	SHUTOFF VALVE
SYS	SYSTEM
T&B	TOP AND BOTTOM
TBM	TEMPORARY BENCH MARK
TDH	TOTAL DYNAMIC HEAD
TEL	TELEPHONE
TEMP	TEMPERATURE, TEMPORARY
THK	THICK, THICKNESS
TOC	TOP OF CONCRETE
TOG	TOP OF GRATE
TOM	TOP OF MASONRY
TOR	TOP OF RIM
TOS	TOP OF STEEL
TRAV	TRAVERSE
TS	TUBE STEEL
TYP	TYPICAL
UH	UNIT HEATER
UNO	UNLESS NOTED OTHERWISE
UNREINF	UNREINFORCED
UP	UTILITY POLE
USGS	UNITED STATES GEOLOGICAL SURVEY
V	VALVE, VOLT
VAC	VACUUM
VCP	VITRIFIED CLAY PIPE
VERT	VERTICAL
VT	VITRIFIED TERRA COTTA
VTR	VENT THROUGH ROOF
W	WEST, WIDTH, WATER
W/	WITH
WI	WROUGHT IRON
WL	WATER LEVEL
WM	WATER METER
W/O	WITHOUT
WT	WATERTIGHT
WV	WATER VALVE
WWF	WELDED WIRE FABRIC
WZTC	WORK ZONE TRAFFIC CONTROL
X	BY, TIMES
YD	YARD
&	AND
L	ANGLE (STEEL)
@	AT
℄	CENTERLINE
C	CHANNEL (STEEL)
#	NUMBER
%	PERCENT

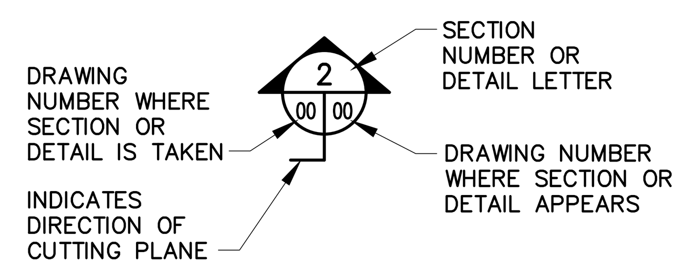

STRUCTURAL LEGEND

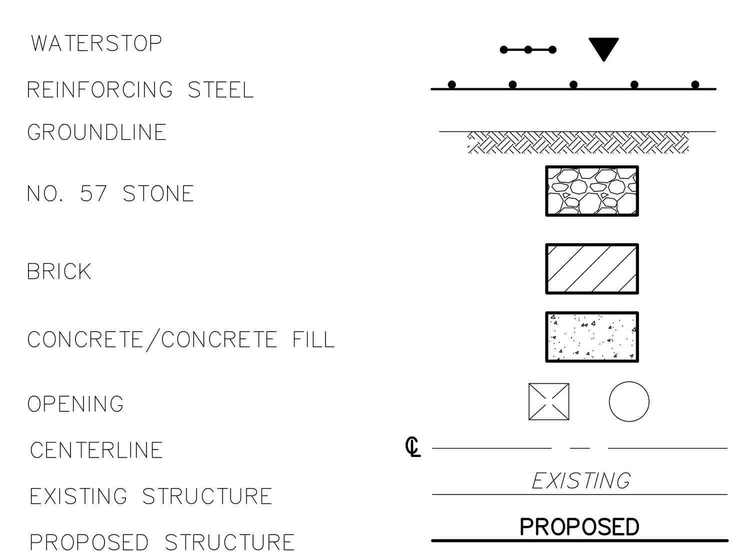

EXISTING

GENERAL LEGEND

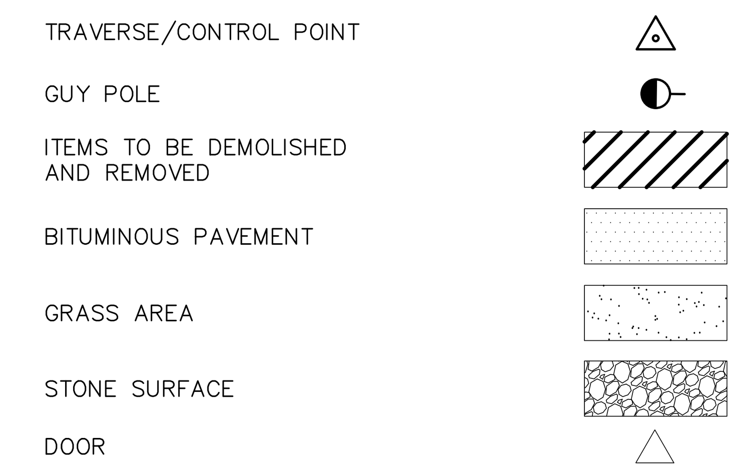

PROPOSED

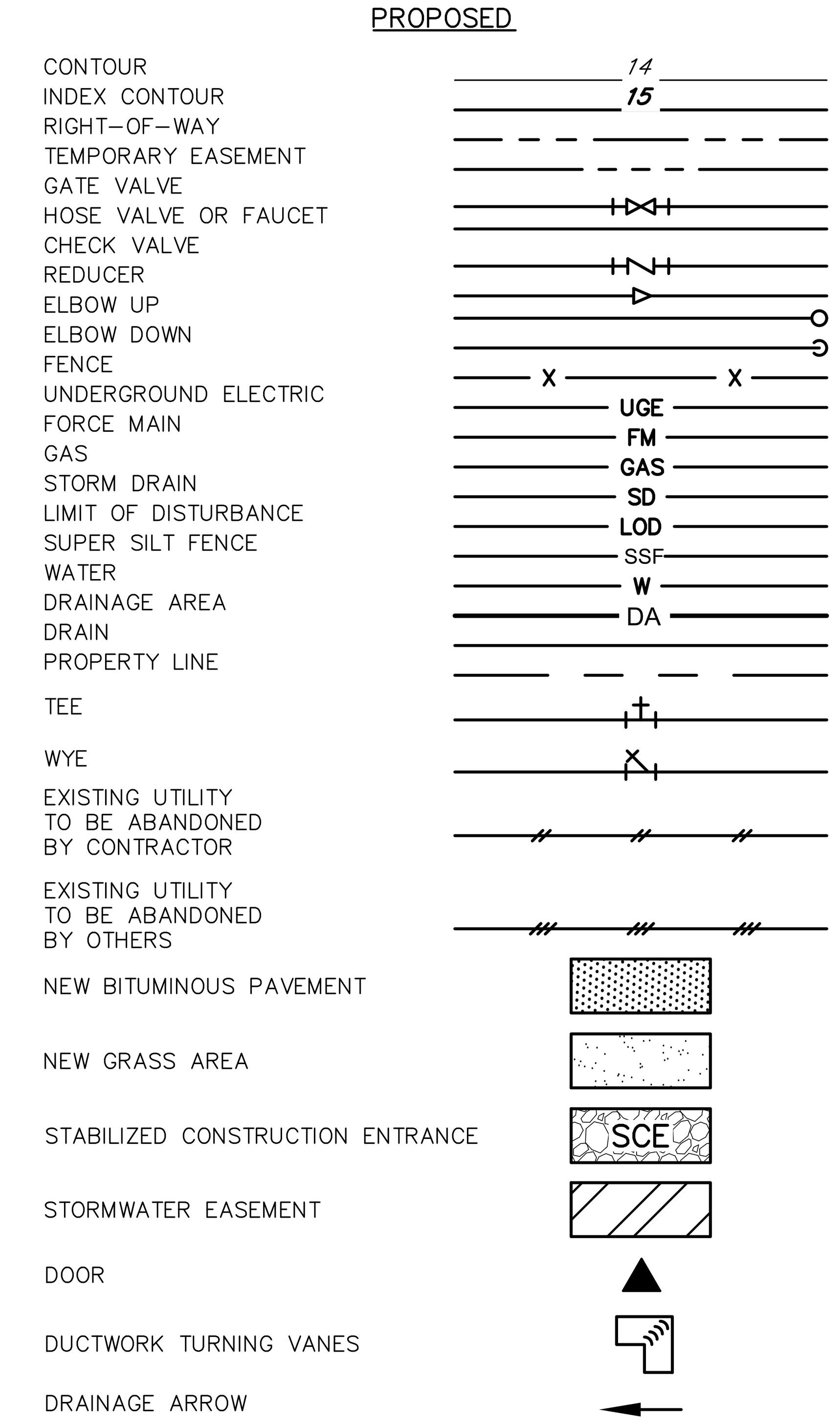

FREDERICK SOIL CONSERVATION DISTRICT
SOIL EROSION AND SEDIMENT CONTROL PLAN APPROVAL

BY: Steve Leathers

DATE: 5-10-22

SCD APPROVAL FOR SEDIMENT AND EROSION CONTROL IS CONTINGENT UPON ISSUANCE OF ALL APPLICABLE REGULATORY PERMITS.

ALL DIMENSIONS AND EXISTING CONDITIONS SHALL BE CHECKED AND VERIFIED BY THE CONTRACTOR AT THE SITE.

RKK21\SYS – \\ad.rkk.com\fs\Cloud\Projects\2019\19082_CreameryPS\Cadd\Plans\General\19082CR-002-GP-G2.dwg Jan 27, 2023 – 8:38am Plot Scale 1:1

01/25/2023

PROFESSIONAL CERTIFICATION

I HEREBY CERTIFY THAT THESE DOCUMENTS WERE PREPARED OR APPROVED BY ME, AND THAT I AM A DULY LICENSED PROFESSIONAL ENGINEER UNDER THE LAWS OF THE STATE OF MARYLAND.
LICENSE NO. 22765 EXPIRATION DATE 07/09/2024

RK&K
700 EAST PRATT STREET, SUITE 500
BALTIMORE, MARYLAND 21202
800.787.3755

NO.	DESCRIPTION	BY	DATE

REVISIONS

TOWN OF EMMITSBURG, MARYLAND
NEW CREAMERY ROAD SEWAGE PUMP STATION
EMMITSBURG, MARYLAND

ABBREVIATIONS AND LEGEND

ENGINEER	CHECKED BY
JSG	RAL
DRAWN BY	DATE
JAB	1/2023

RK&K PROJECT NUMBER 19082

DRAWING NUMBER G2

Division of Planning and Permitting
Department of Development
Review Engineering

APPROVED: 06/08/22

Signature:

NOTES:

1. ALL CONSTRUCTION SHALL BE IN ACCORDANCE WITH THE "FREDERICK COUNTY GENERAL CONDITIONS AND STANDARD SPECIFICATIONS FOR WATER MAINS, SANITARY SEWER AND RELATED STRUCTURES", LATEST EDITION.

2. THIS DOCUMENT INCLUDES INFORMATION AND DEPICTIONS OF FIRST ENERGY CORPORATION'S ELECTRIC & UGI UTILITY CORPORATION'S GAS UTILITIES LOCATED WITHIN THE PROJECT AREA. LOCATIONS, DIMENSIONS, DEPTHS, AND OTHER DETAILS OF SUCH UTILITIES MAY NOT BE AS-BUILT, AND THE INFORMATION SHALL NOT BE RELIED UPON WITHOUT FIELD VERIFICATION. EXCAVATORS MUST EMPLOY SAFE DIGGING BEST PRACTICES WHEN APPROACHING GAS AND ELECTRIC UTILITIES AND COMPLY WITH ALL APPLICABLE FEDERAL, STATE, AND LOCAL LAWS, INCLUDING, BUT NOT LIMITED TO, THE "MISS UTILITY LAW." NO REPRESENTATION, GUARANTEES, OR WARRANTIES, EXPRESS OR IMPLIED TO THE QUALITY, COMPLETENESS, OR ACCURACY OF THE UTILITY INFORMATION, AND IN ACCEPTING THIS DOCUMENT, THE RECIPIENT EXPRESSLY ACKNOWLEDGES AND AGREES THAT IT IS NOT RELYING ON THE ACCURACY OF THE SAME.

3. THE CONTRACTOR SHALL NOTIFY MISS UTILITY AT (800) 257-7777 AT LEAST 48 HOURS PRIOR TO STARTING EXCAVATION.

4. ALL CONNECTIONS TO EXISTING UTILITIES BUILT BY OTHERS SHALL BE PERFORMED UNDER THIS CONTRACT.

5. EXISTING UTILITIES SHOWN ARE BASED ON THE BEST AVAILABLE INFORMATION. THE CONTRACTOR SHALL LOCATE ALL EXISTING UTILITIES PRIOR TO EXCAVATION AND SHALL PROTECT THEM DURING CONSTRUCTION. IN CASE OF BREAKAGE OF ANY EXISTING SEWER PIPE, RESULTANT SEWAGE OVERFLOW AND/OR SPILL SHALL IMMEDIATELY BE REPORTED TO THE OWNER. THE CONTRACTOR SHALL BE LIABLE FOR ALL SEWAGE OVERFLOW AND/OR SPILL CLEAN UP COSTS INCURRED BY THE OWNER AND/OR STATE OF MARYLAND AND ALSO SHALL BE LIABLE FOR ANY CIVIL AND/OR CRIMINAL PENALTIES ASSOCIATED WITH SUCH OVERFLOWS AND/OR SPILLS.

6. THE CONTRACTOR SHALL PROTECT ALL TREES FROM DAMAGE. ANY DAMAGE SHALL BE RECTIFIED TO THE SATISFACTION OF THE OWNER.

7. CONTRACTOR SHALL BE RESPONSIBLE FOR ACQUIRING ALL PERMITS NECESSARY FOR CONSTRUCTION. CONTRACTOR SHALL NOTIFY THE OWNER AND ENGINEER OF ANY CHANGES OR CONDITIONS REQUIRED BY ANY PERMIT.

8. THESE DRAWINGS WERE PREPARED BASED ON AS-BUILT AND OTHER CONSTRUCTION DOCUMENTS, WHICH MAY OR MAY NOT BE COMPLETELY ACCURATE. SCALING OF THESE DRAWINGS SHALL BE FOR ESTIMATING PURPOSES ONLY AND ALL DIMENSIONS SCALED SHALL BE CONSIDERED APPROXIMATE AND SHALL BE FIELD VERIFIED.

9. CONSTRUCTION SHALL CONFORM TO ALL APPLICABLE FEDERAL, STATE AND LOCAL REGULATIONS, STANDARDS, SPECIFICATIONS AND REQUIREMENTS.

10. HORIZONTAL CONTROL IS BASED ON THE MARYLAND STATE PLANE COORDINATE SYSTEM AND 83(2011). VERTICAL CONTROL IS BASED ON NORTH AMERICAN VERTICAL DATUM OF 1988 (NAVD88). HORIZONTAL AND VERTICAL CONTROL ARE REFERENCED TO THE LISTED BENCH MARK:
    STATION: TRAVERSE SPIKE 1
    NORTHING: 740,694.79
    EASTING: 1,222,318.52
    ELEVATION: 387.16
    DESCRIPTION: TRAVERSE SPIKE ALONG SHOULDER OF CREAMERY ROAD

11. THE EXISTING PUMP STATION ELEVATIONS SHOWN ARE BASED ON PLANS ENTITLED "TOWN OF EMMITSBURG, MARYLAND WASTEWATER TREATMENT FACILITY", CONTRACT NO. 85-01-S, REVISED TO AS-BUILT CONDITIONS, JANUARY 1990, AS PROVIDED BY THE TOWN OF EMMITSBURG. AN ADJUSTMENT OF -0.76' WAS APPLIED TO THE ELEVATIONS PROVIDED ON THE AS-BUILT DRAWINGS TO MOVE FROM THE MECHANICAL DEMOLITION DRAWINGS TO THE IMPROVEMENTS DRAWINGS. THE CONTRACTOR IS RESPONSIBLE FOR VERIFYING THE ADJUSTMENT FACTOR AND MAKING ALL NECESSARY ADJUSTMENTS IN ELEVATIONS.

12. THE LOCATIONS OF UNDERGROUND UTILITIES AS SHOWN HEREON ARE BASED ON ABOVE GROUND FIELD OBSERVATIONS, MISS UTILITY PAINT MARKINGS, AND RECORD DRAWINGS. ADDITIONAL BURIED UTILITIES OR STRUCTURES MAY BE ENCOUNTERED. NO EXCAVATIONS WERE MADE DURING THE PROGRESS OF THIS SURVEY TO LOCATE BURIED UTILITIES/STRUCTURES. ALL SUBSURFACE UTILITIES/STRUCTURES SHOWN ARE TO BE CONSIDERED APPROXIMATE LOCATION ONLY. UNDERGROUND UTILITIES MUST BE VERIFIED BY TEST PITS.

13. CONTRACTOR SHALL ASSUME THAT ALL CAULK AND FLANGE GASKETS ARE ASBESTOS-CONTAINING MATERIALS (ACM). ANY DISTURBANCE OR REMOVAL OF THESE MATERIALS SHALL BE DONE IN ACCORDANCE WITH OSHA 29CFR1926.1101 FOR CLASS II WORK. CONTRACTOR SHALL REMOVE AND DISPOSE OF ACM PRIOR TO RENOVATION ACTIVITIES THAT MAY MAKE THEM EPA REGULATED.

14. CONTRACTOR SHALL ASSUME THAT ALL EXISTING PAINT IS LEAD-BASED PAINT (LBP). THIS PAINT MUST BE HANDLED IN ACCORDANCE WITH THE REQUIREMENTS OF THE EPA AND THE OSHA LEAD IN CONSTRUCTION STANDARD WITH MARYLAND AMENDMENTS (29CFR1926.62). FOR DISPOSAL, CONTRACTOR SHALL FOLLOW THE REQUIREMENTS OF THE RESOURCE CONSERVATION AND RECOVERY ACT (RCRA) 40CFR261 AND ANY OTHER APPLICABLE FEDERAL, STATE AND LOCAL LAWS AND REGULATIONS. PROHIBITED METHODS OF LEAD PAINT REMOVAL INCLUDE: SANDING (EXCEPT WITH EQUIPMENT FITTED WITH HEPA FILTERS), BURNING WITH AN OPEN FLAME TORCH, OR ANY METHODS WHICH PRODUCE UNCONTROLLED DUST OR FUMES. WHENEVER RENOVATION OR DEMOLITION IS PERFORMED ON PAINTED COMPONENTS, CONTRACTOR SHALL CONTROL DUST. NON-REGULATED PAINT HAS THE ABILITY TO PRODUCE LEAD DUST WHEN IT IS DISTURBED.

15. THE PUMPING STATION DESIGN CAPACITY OF 3,300 GPM MUST REMAIN AVAILABLE FOR THE DURATION OF THE PROJECT. TEMPORARY BYPASS PIPING FROM THE EXISTING PUMP STATION DISCHARGE AROUND THE WORK AREAS FOR THE NEW PUMP STATION WAS ASSUMED BY THE ENGINEER FOR THE PROJECT DURATION. PROVIDE TEMPORARY BYPASS PUMPING AS NECESSARY TO COMPLETE THE NEW PUMP STATION. TEMPORARY BYPASS PUMPING AROUND THE PUMP STATION FOR A LIMITED DURATION OF THE PROJECT WAS ASSUMED BY THE ENGINEER; HOWEVER, IT IS SPECIFICALLY NOTED THAT MEANS AND METHODS OF CONSTRUCTION ARE THE CONTRACTOR'S RESPONSIBILITY. IT IS RECOMMENDED THAT THE CONTRACTOR PERFORM WHATEVER INVESTIGATION IT DEEMS NECESSARY TO UNDERSTAND WHAT IS GOING TO BE INVOLVED TO CONDUCT THIS WORK TO ITS OWN SATISFACTION. CONTRACTOR IS RESPONSIBLE FOR ANY TEMPORARY POWER AS MAY BE REQUIRED FOR TEMPORARY BYPASS PUMPING.

16. CONTRACTOR SHALL SUBMIT A PROPOSED SEQUENCE OF CONSTRUCTION FOR REVIEW PRIOR TO COMMENCEMENT OF ANY WORK. SEQUENCE OF CONSTRUCTION SHALL INCLUDE TEMPORARY BYPASS PUMPING AND TEMPORARY BYPASS PIPING PROPOSED IN ORDER TO COMPLETE THE NEW PUMPING STATION WHILE MAINTAINING THE DESIGN CAPACITY OF THE PUMP STATION. CLEARING AND GRUBBING, EXCAVATION SUPPORT AND PROTECTION, DEWATERING, LINE TAPPING AND STOPPING, PIPE AND VALVE SUPPORT, THRUST RESTRAINT, SITE RESTORATION, AND ALL OTHER WORK NECESSARY TO COMPLETE THE NEW PUMPING STATION SHALL ALSO BE INCLUDED.

17. BLASTING IS NOT PERMITTED UNDER ANY CIRCUMSTANCES FOR EXCAVATION. SEE SPECIFICATION SECTION 02280 FOR CONSTRUCTION VIBRATION MONITORING REQUIREMENTS.

18. CONTRACTOR SHALL NOT COMMISSION THE NEW PUMP STATION AND OPERATE IT USING SEWAGE UNTIL ALL PUMPING STATION COMMUNICATION SYSTEMS ARE CONNECTED AND OPERATIONAL, ALL MECHANICAL AND ELECTRICAL SYSTEMS SHALL BE FULLY OPERATIONAL, AS DESIGNED. THE PUMP STATION ALARMS SHALL BE FULLY OPERATIONAL, AS DESIGNED, AND SHALL BE TESTED AND VERIFIED WITH THE SCADA SYSTEMS. A FULL PUMP STATION DEMONSTRATION TEST SHALL BE COMPLETED BEFORE THE CONTRACTOR CAN START THE THIRTY DAY DEMONSTRATION PERIOD. THE ABOVE SHALL BE WITNESSED AND ACCEPTED BY THE OWNER. THE CONTRACTOR SHALL NOTIFY THE OWNER AT LEAST SEVEN DAYS PRIOR TO CONDUCTING ANY TESTING SO THE PROPER PERSONNEL CAN BE SCHEDULED TO WITNESS THE TESTING.

19. THE USE OF THE STATION POWER TO PERFORM ANY WORK BY THE CONTRACTOR IS PROHIBITED. BEFORE ANY DEMOLITION TO THE EXISTING PUMP STATION FACILITY BEGINS, EITHER THE BYPASS PUMPING SYSTEM MUST BE INSTALLED, TESTED AND OPERATIONAL OR THE NEW PUMP STATION INSTALLED, TESTED AND OPERATIONAL (TO INCLUDE COMPLETION OF THE 30-DAY DEMONSTRATION PERIOD).

20. EXISTING FEATURES DENOTED BY SLANTED TEXT.

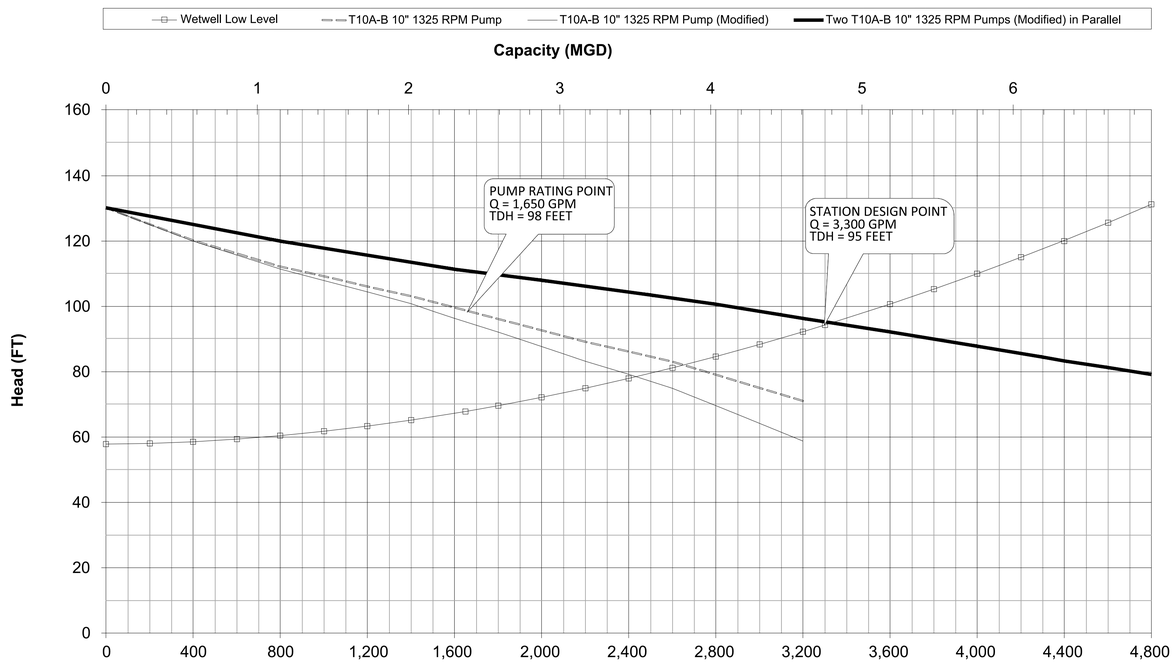

SYSTEM CURVE

ALL DIMENSIONS AND EXISTING CONDITIONS
SHALL BE CHECKED AND VERIFIED BY THE CONTRACTOR AT THE SITE.

FREDERICK SOIL CONSERVATION DISTRICT
SOIL EROSION AND SEDIMENT CONTROL PLAN APPROVAL

BY: Steve Leatherman

DATE: 5-10-22

SCD APPROVAL FOR SEDIMENT AND EROSION CONTROL IS CONTINGENT UPON ISSUANCE OF ALL APPLICABLE REGULATORY PERMITS.

MARYLAND REGISTERED PROFESSIONAL ENGINEER
JOSEPH A. GRIMM
No. 22765
STATE OF MARYLAND
PROFESSIONAL ENGINEER
01/25/2023

PROFESSIONAL CERTIFICATION

I HEREBY CERTIFY THAT THESE DOCUMENTS WERE PREPARED OR APPROVED BY ME, AND THAT I AM A DULY LICENSED PROFESSIONAL ENGINEER UNDER THE LAWS OF THE STATE OF MARYLAND.
LICENSE NO. 22765
EXPIRATION DATE 07/09/2024

RK&K
700 EAST PRATT STREET, SUITE 500
BALTIMORE, MARYLAND 21202
800.787.3755

NO.	DESCRIPTION	BY	DATE
	REVISIONS		

TOWN OF EMMITSBURG, MARYLAND
NEW CREAMERY ROAD SEWAGE PUMP STATION
EMMITSBURG, MARYLAND

GENERAL NOTES AND SYSTEM CURVE

ENGINEER	CHECKED BY
JSG	RAL
DRAWN BY	DATE
JAB	1/2023
RK&K PROJECT NUMBER	
19082	

DRAWING NUMBER
G3
SHEET NO. 3 OF 60

RK&K\SYS = \\ad.rkk.com\US\Docs\Projects\2019\19082_Creamery\PS\Civil\Plans\General\19082PS-003-GP-G3.dwg Jan 27, 2023 - 8:37am Plot Scale: 1:1

Division of Planning and Permitting
Department of Development
Review Engineering

APPROVED: 06/01/22

Signature:

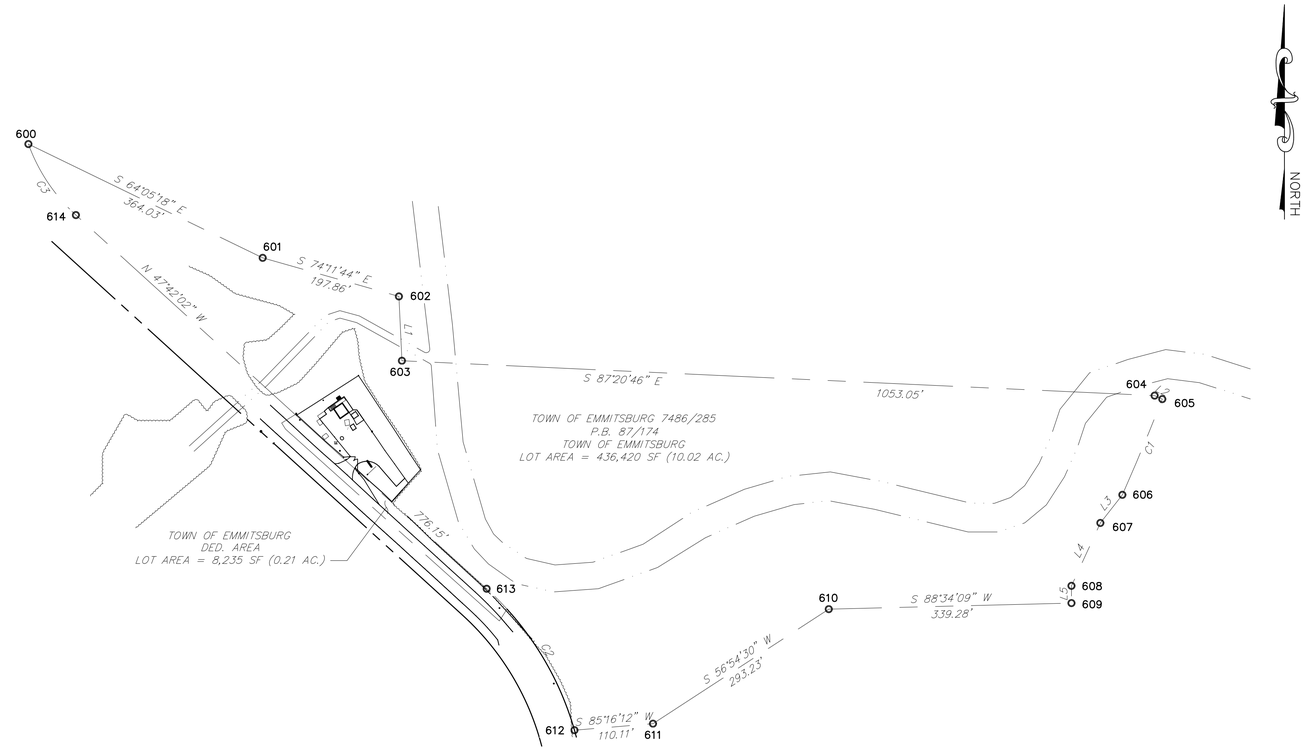

SITE PROPERTY PLAN

SCALE: 1"=100'

PROPERTY CORNER COORDINATES		
PT	NORTHING	EASTING
600	741,100.80	1,221,975.56
601	740,941.72	1,222,302.99
602	740,887.83	1,222,493.37
603	740,797.91	1,222,497.58
604	740,749.15	1,223,549.50
605	740,744.27	1,223,560.20
606	740,610.48	1,223,504.41
607	740,571.18	1,223,473.66
608	740,483.27	1,223,433.29
609	740,459.18	1,223,433.26
610	740,450.70	1,223,094.09
611	740,290.61	1,222,848.42
612	740281.53	1,222,738.68
613	740,479.20	1,222,616.03
614	741,001.55	1,222,041.95

PROPERTY LINE TABLE		
LINE	CHORD BEARING	ARC LENGTH
L1	S 02°40'37" E	90.02'
L2	S 65°29'37" E	11.77'
L3	S 38°02'39" W	49.91'
L4	S 24°39'51" W	96.74'
L5	S 00°04'10" W	24.09'

PROPERTY CURVE TABLE					
CURVE	ARC LENGTH	RADIUS	DELTA ANGLE	CHORD BEARING	CHORD LENGTH
C1	144.96'	3706.72'	2°14'27"	S 22°38'09" W	144.96'
C2	235.64'	425.00'	31°46'04"	N 31°49'14" W	232.63'
C3	120.59'	248.20'	27°50'15"	N 33°46'55" W	119.41'

ALL DIMENSIONS AND EXISTING CONDITIONS
SHALL BE CHECKED AND VERIFIED BY THE CONTRACTOR AT THE SITE.

1"=100' 100' 50' 0 100' 200'

PROFESSIONAL CERTIFICATION

I HEREBY CERTIFY THAT THESE DOCUMENTS WERE PREPARED OR APPROVED BY ME, AND THAT I AM A DULY LICENSED PROFESSIONAL ENGINEER UNDER THE LAWS OF THE STATE OF MARYLAND.
LICENSE NO. 22765 EXPIRATION DATE 07/09/2024

RK&K
700 EAST PRATT STREET, SUITE 500
BALTIMORE, MARYLAND 21202
800.787.3755

STATE OF MARYLAND
JEFFREY SCOTT GEORGE
PROFESSIONAL ENGINEER
01/25/2023

NO.	DESCRIPTION	BY	DATE
	REVISIONS		

TOWN OF EMMITSBURG, MARYLAND
NEW CREAMERY ROAD SEWAGE PUMP STATION
EMMITSBURG, MARYLAND

EXISTING PROPERTY PLAN

ENGINEER	CHECKED BY
JSG	RAL
DRAWN BY	DATE
JAB	1/2023
RK&K PROJECT NUMBER	
19082	

DRAWING NUMBER
C1

SHEET NO. 4 OF 60

RKK21\SYS - \\ad.rkk.com\fs\Cloud\Projects\2019\19082_CreameryPS\Cadd\Plans\Civil\19082CR-004-CP-C1-SC7.dwg Jan 27, 2023 - 8:53am Plot Scale 1:1

Division of Planning and Permitting
Department of Development
Review Engineering

APPROVED: 06/01/22

Signature:

NOTES:

1. ALL EXISTING FEATURES DENOTED BY SLANTED TEXT.

2. HORIZONTAL CONTROL IS BASED ON THE MARYLAND STATE PLANE COORDINATE SYSTEM AND 83(2011). VERTICAL CONTROL IS BASED ON NORTH AMERICAN VERTICAL DATUM OF 1988 (NAVD88). HORIZONTAL AND VERTICAL CONTROL ARE REFERENCED TO THE LISTED BENCH MARK:
   STATION: TRAVERSE SPIKE 1
   NORTHING: 740,694.79
   EASTING: 1,222,318.52
   ELEVATION: 387.16
   DESCRIPTION: TRAVERSE SPIKE ALONG SHOULDER OF CREAMERY ROAD

3. THE LOCATIONS OF UNDERGROUND UTILITIES ARE BASED ON ABOVEGROUND FIELD OBSERVATIONS AND RECORD DRAWINGS. ADDITIONAL BURIED UTILITIES OR STRUCTURES MAY BE ENCOUNTERED. NO EXCAVATIONS WERE MADE TO LOCATE BURIED UTILITIES/STRUCTURES. ALL SUBSURFACE UTILITIES/STRUCTURES SHOWN ARE TO BE CONSIDERED APPROXIMATE LOCATIONS ONLY. UNDERGROUND UTILITIES MUST BE VERIFIED BY TEST PITS.

4. PROVIDE TEN (10) DAYS' NOTICE TO THE TOWN PRIOR TO THE START OF DEMOLITION SO THAT COMPONENTS DESIRED FOR SALVAGE CAN BE IDENTIFIED.

5. EXISTING IMPERVIOUS AREA = 5,715 SF (0.131 AC.).

6. CONTRACTOR IS RESPONSIBLE FOR PROVIDING ALL TEMPORARY SHORING AND BRACING REQUIRED TO MAINTAIN STABILITY OF EXISTING STRUCTURES AND UTILITIES.

7. EXISTING ASPHALT PAVEMENT AND ASSOCIATED STONE SUBBASE SHALL BE REMOVED TO A DEPTH OF 11½" IN PREPARATION FOR NEW PAVEMENT AND GRASS. TOTAL AREA OF REMOVAL = 4,500 SF (0.103 AC.).

8. EXISTING GRASS AND SOIL SHALL BE REMOVED TO A DEPTH OF 11½" IN PREPARATION FOR NEW PAVEMENT AND STRUCTURES. TOTAL AREA OF REMOVAL = 5,880 SF (0.135 AC.).

9. SOURCE OF WATER SERVICE HAS NOT BEEN VERIFIED. CONTRACTOR SHALL BE RESPONSIBLE FOR VERIFYING THE SOURCE OF WATER PRIOR TO DISCONNECTION AND DEMOLITION OF PIPING. CONTRACTOR SHALL BE RESPONSIBLE FOR ISOLATING THE SOURCE OF WATER FOR THE PIPING TO BE DEMOLISHED AND CAPPING THE WATER SOURCE, AS REQUIRED.

10. REMOVE THE EXISTING FORCE MAIN TO THE EXTENT NECESSARY TO INSTALL THE NEW FORCE MAIN AND VALVE VAULT AS SHOWN.

11. THE EXISTING PUMP STATION SHALL REMAIN IN SERVICE DURING CONSTRUCTION OF THE NEW PUMP STATION. BEFORE ANY DEMOLITION TO THE EXISTING PUMP STATION BEGINS, EITHER THE TEMPORARY BYPASS PUMPING SYSTEM MUST BE INSTALLED TESTED AND OPERATIONAL OR THE NEW PUMP STATION INSTALLED, TESTED AND OPERATIONAL (TO INCLUDE COMPLETION OF THE 30-DAY DEMONSTRATION PERIOD).

12. BLASTING IS NOT PERMITTED UNDER ANY CIRCUMSTANCES FOR EXCAVATION. CONTRACTOR SHALL BE RESPONSIBLE FOR MAINTAINING THE INTEGRITY AND FUNCTIONALITY OF THE EXISTING SEWAGE PUMPING STATION DURING CONSTRUCTION. SEE SPECIFICATION SECTION 02280 FOR CONSTRUCTION VIBRATION MONITORING REQUIREMENTS. EXCAVATION ACTIVITIES SHALL BE MONITORED AS REQUIRED BY SPECIFICATION SECTION 02280 TO ENSURE ADDITIONAL STRESSES AND/OR DAMAGE TO THE EXISTING SEWAGE PUMPING STATION DOES NOT OCCUR DURING CONSTRUCTION. MONITORING SHALL BE REQUIRED UNTIL SUCCESSFUL COMPLETION OF THE DEMONSTRATION PERIOD. POST CONSTRUCTION MONITORING SURVEY WITH REQUIRED PHOTOS MAY BE WAIVED BY THE ENGINEER UPON COMPLETION OF THE DEMONSTRATION PERIOD FOR THE NEW CREAMERY ROAD SEWAGE PUMP STATION.

13. GAS MAIN IS LOCATED ON THE SOUTH SIDE OF CREAMERY ROAD. GAS MAIN INFORMATION IS BASED ON SURVEY INFORMATION. CONTRACTOR SHALL VERIFY EXACT LOCATION WITH UGI UTILITY CORPORATION.

14. THE PUMPING STATION DESIGN CAPACITY OF 3,300 GPM MUST REMAIN AVAILABLE FOR THE DURATION OF THE PROJECT. PROVIDE TEMPORARY BYPASS PUMPING AS NECESSARY TO COMPLETE THE NEW PUMP STATION. TEMPORARY BYPASS PUMPING AROUND THE PUMP STATION FOR A LIMITED DURATION OF THE PROJECT WAS ASSUMED BY THE ENGINEER; HOWEVER, IT IS SPECIFICALLY NOTED THAT MEANS AND METHODS OF CONSTRUCTION ARE THE CONTRACTOR'S RESPONSIBILITY. TEMPORARY BYPASS PIPING FROM THE EXISTING PUMP STATION DISCHARGE AROUND THE WORK AREAS FOR THE NEW PUMP STATION WAS ASSUMED BY THE ENGINEER FOR THE PROJECT DURATION. IT IS RECOMMENDED THAT THE CONTRACTOR PERFORM WHATEVER INVESTIGATION IT DEEMS NECESSARY TO UNDERSTAND WHAT IS GOING TO BE INVOLVED TO CONDUCT THIS WORK TO ITS OWN SATISFACTION. CONTRACTOR IS RESPONSIBLE FOR ANY TEMPORARY POWER AS MAY BE REQUIRED FOR TEMPORARY BYPASS PUMPING.

15. REMOVE THE DIESEL GENERATOR, DIESEL FUEL STORAGE TANK, ASSOCIATED PIPING, AND ALL OTHER ACCESSORIES WITH THE DIESEL GENERATOR IN ACCORDANCE WITH FEDERAL, STATE, AND LOCAL REGULATIONS.

PROPERTY CORNER COORDINATES		
PT	NORTHING	EASTING
8	740,765.30	1,222,417.07
401	740,756.80	1,222,422.35
402	740,618.96	1,222,531.44
403	740,492.74	1,222,672.12
502	740,710.89	1,222,329.52
503	740,434.26	1,222,633.68
504	740,702.40	1,222,334.80

TRAVERSE COORDINATES				
TRAV	NORTHING	EASTING	ELEVATION	DESCRIPTION
1	740,694.79	1,222,318.52	387.16'	REBAR
6	740,706.88	1,222,457.15	386.07'	REBAR
113	740,386.95	1,222,631.98	397.77'	REBAR
184	740,683.24	1,222,319.08	387.40'	TOP OF BOLT
258	740,508.62	1,222,586.25	394.27'	TRAV
270	740,582.20	1,222,556.87	382.66'	TRAV

ALL DIMENSIONS AND EXISTING CONDITIONS SHALL BE CHECKED AND VERIFIED BY THE CONTRACTOR AT THE SITE.

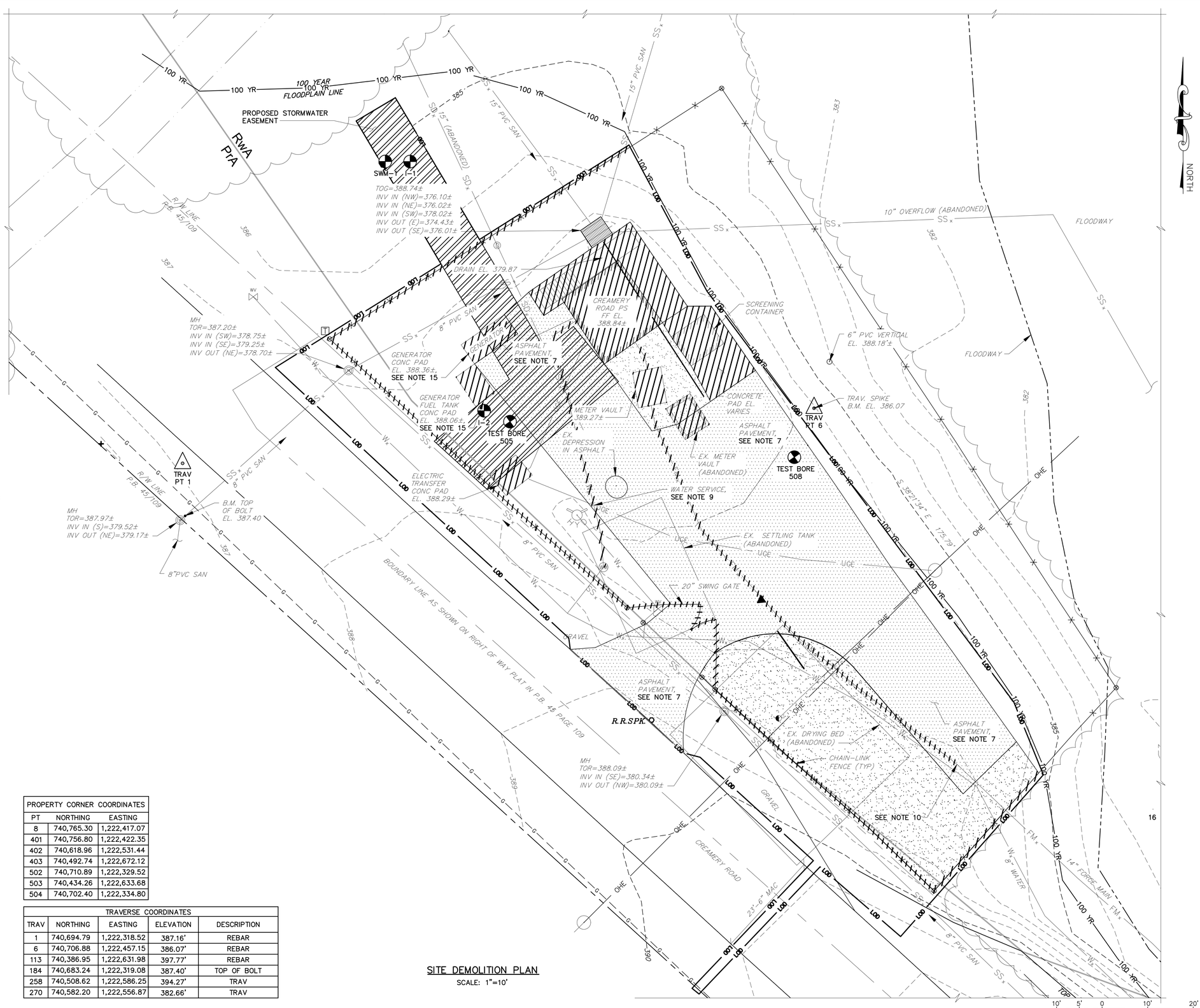

SITE DEMOLITION PLAN
SCALE: 1"=10'

PROFESSIONAL CERTIFICATION

I HEREBY CERTIFY THAT THESE DOCUMENTS WERE PREPARED OR APPROVED BY ME, AND THAT I AM A DULY LICENSED PROFESSIONAL ENGINEER UNDER THE LAWS OF THE STATE OF MARYLAND. LICENSE NO. 22765 EXPIRATION DATE 07/09/2024

01/25/2023

RK&K
700 EAST PRATT STREET, SUITE 500
BALTIMORE, MARYLAND 21202
800.787.3765

NO.	DESCRIPTION	BY	DATE
	REVISIONS		

TOWN OF EMMITSBURG, MARYLAND
NEW CREAMERY ROAD SEWAGE PUMP STATION
EMMITSBURG, MARYLAND

SITE DEMOLITION PLAN

ENGINEER	CHECKED BY
JSG	RAL
DRAWN BY	DATE
JAB	1/2023
RK&K PROJECT NUMBER	
19082	

DRAWING NUMBER
C2
SHEET NO. 5 OF 60

RK&K 21 \\SYS - \\ad.rkk.com\VA\Doud\Projects\2019\19082_Creamery\PS\Cadd\Plans\Civil\19082SDP-004-CP-C1-SC7.dwg Jan 27, 2023 - 8:53am Plot Scale 1:1

Division of Planning and Permitting
Department of Development
Review Engineering

APPROVED: 06/0?/22

Signature:

NOTES:

1. ALL EXISTING FEATURES DENOTED BY SLANTED TEXT.

2. HORIZONTAL CONTROL IS BASED ON THE MARYLAND STATE PLANE COORDINATE SYSTEM AND 83(2011). VERTICAL CONTROL IS BASED ON NORTH AMERICAN VERTICAL DATUM OF 1988 (NAVD88). HORIZONTAL AND VERTICAL CONTROL ARE REFERENCED TO THE LISTED BENCH MARK:
STATION: TRAVERSE SPIKE 1
NORTH: 740,694.79
SOUTH: 1,222,318.52
ELEVATION: 387.16
DESCRIPTION: TRAVERSE SPIKE ALONG SHOULDER OF CREAMERY ROAD

3. THE LOCATIONS OF UNDERGROUND UTILITIES ARE BASED ON ABOVEGROUND FIELD OBSERVATIONS AND RECORD DRAWINGS. ADDITIONAL BURIED UTILITIES OR STRUCTURES MAY BE ENCOUNTERED. NO EXCAVATIONS WERE MADE TO LOCATE BURIED UTILITIES/STRUCTURES. ALL SUBSURFACE UTILITIES/STRUCTURES SHOWN ARE TO BE CONSIDERED APPROXIMATE LOCATIONS ONLY. UNDERGROUND UTILITIES MUST BE VERIFIED BY TEST PITS.

4. ALL FORCE MAIN AND DISCHARGE PIPING JOINTS SHALL BE RESTRAINED.

5 FIELD VERIFY EXISTING 14–INCH FORCE MAIN ELEVATION AT THE CONNECTION POINT BY TEST PITTING PRIOR TO SUBMITTING THE PIPING LAYOUT DRAWINGS AND PRECAST CONCRETE VAULT SUBMITTALS. REFER TO THIS DRAWING FOR CONNECTION POINT. THE EXACT LOCATION OF THE EXISTING 14–INCH FORCE MAIN IS UNKNOWN.

6. FURNISH AND INSTALL ALL ADAPTERS, COUPLINGS, GLANDS, RETAINERS, GASKETS, BOLTS AND OTHER MISCELLANEOUS MATERIALS NECESSARY TO MAKE FINAL TIE–IN TO FORCE MAIN. FINAL TIE–IN MUST BE WITNESSED BY THE INSPECTOR.

7. NEW DRAINS SHALL SLOPE AT ¼" PER FOOT FOR POSITIVE DRAINAGE TO WETWELL.

8. ALL DISTURBED AREAS SHALL BE GRADED, SEEDED AND LANDSCAPED TO RESTORE ALL PROPERTY TO ORIGINAL UNDISTURBED CONDITION.

9. TOTAL AREA WITHIN LIMIT OF DISTURBANCE = 12,520 SF (0.287 AC.)
– AREA OF EXISTING STRUCTURES = 30 SF (0.001 AC.)
– AREA OF STAGING AREA = 5,595 SF (0.128 AC.)
TOTAL DISTURBED AREA = 6,895 SF (0.160 AC.)
– AREA OF NEW STRUCTURES = 300 SF (0.007 AC.)
– AREA OF NEW BUILDING = 1,280 SF (0.029 AC.)
– AREA OF NEW PAVEMENT = 4,100 SF (0.094 AC.)
– AREA OF NEW GRASS = 1,215 SF (0.028 AC.)

10. TOTAL IMPERVIOUS AREA = 5,710 (0.131 AC.).
EXISTING IMPERVIOUS AREA = 30 SF (0.001 AC.).
PROPOSED IMPERVIOUS AREA = 5,680 SF (0.130 AC.)

11. THERE SHALL BE NO CLEARING, GRADING, CONSTRUCTION OR DISTURBANCE OF VEGETATION OUTSIDE OF THE LIMIT OF DISTURBANCE EXCEPT AS PERMITTED BY FREDERICK COUNTY DIVISION OF PLANNING AND PERMITTING.

12. MEANS FOR ISOLATING THE WATER SERVICE HAVE NOT BEEN VERIFIED. CONTRACTOR SHALL BE RESPONSIBLE FOR ISOLATING THE WATER SERVICE TO REROUTE THE EXISTING WATER SERVICE PIPING.

13. MAINTAIN A 1'–6" MINIMUM VERTICAL DISTANCE BETWEEN WATER AND SEWER LINES WITH THE WATER LINE LOCATED ABOVE THE SEWER LINE. WHERE THIS IS NOT POSSIBLE THE WATER LINE SHALL BE CONCRETE–ENCASED A MINIMUM DISTANCE OF 5'–0" ON BOTH SIDES OF THE CROSSING WITH THE SANITARY LINE.

14. BLASTING IS NOT PERMITTED UNDER ANY CIRCUMSTANCES FOR EXCAVATION. CONTRACTOR SHALL BE RESPONSIBLE FOR MAINTAINING THE INTEGRITY AND FUNCTIONALITY OF THE EXISTING SEWAGE PUMPING STATION DURING CONSTRUCTION. SEE SPECIFICATION SECTION 02280 FOR CONSTRUCTION VIBRATION MONITORING REQUIREMENTS. EXCAVATION ACTIVITIES SHALL BE MONITORED AS REQUIRED BY SPECIFICATION SECTION 02280 TO ENSURE ADDITIONAL STRESSES AND/OR DAMAGE TO THE EXISTING SEWAGE PUMPING STATION DOES NOT OCCUR DURING CONSTRUCTION. MONITORING SHALL BE REQUIRED UNTIL SUCCESSFUL COMPLETION OF THE DEMONSTRATION PERIOD. POST CONSTRUCTION MONITORING SURVEY WITH REQUIRED PHOTOS MAY BE WAIVED BY THE ENGINEER UPON COMPLETION OF THE DEMONSTRATION PERIOD FOR THE NEW CREAMERY ROAD SEWAGE PUMP STATION.

15. INSTALL NEW 48–INCH PRECAST CONCRETE MANHOLE WITH FRAME AND COVER. SEE FREDERICK COUNTY STANDARD DETAILS 5.1 AND 201.1.

16. PROVIDE HORIZONTAL AND VERTICAL BENDS AS REQUIRED TO CONNECT EXISTING FORCE MAIN. BENDS SHALL BE LIMITED TO 45° MAX. A MINIMUM STRAIGHT PIPE LENGTH OF 8 FEET SHALL BE PROVIDED BETWEEN THE LAST BEND OF JOINT AND THE FINAL TIE–IN TO THE EXISTING FORCE MAIN.

17. THE NEW GAS SERVICE SHALL COME FROM THE GAS MAIN ON THE SOUTH SIDE OF CREAMERY ROAD, SHALL INCLUDE TAPPING THE GAS MAIN AND METER, AND SHALL BE INSTALLED BY UGI UTILITY CORPORATION (UGI) AND/OR IN COORDINATION WITH UGI. SITE OF THE GAS SERVICE SHALL BE SUITABLE FOR GENERATOR FURNISHED, CONTRACTOR SHALL PROVIDE A GAS REGULATOR AS REQUIRED BY GENERATOR TO ACCOMMODATE UGI GAS PRESSURE PROVIDED. THE CONTRACTOR SHALL CONNECT REGULATOR TO GENERATOR AND NEW GAS METER PER GENERATOR MANUFACTURE AND UGI REQUIREMENTS. ALL GAS PIPING, ROUGH–INS AND MISCELLANEOUS MATERIAL SHALL BE BY THE CONTRACTOR IN ACCORDANCE WITH UGI REQUIREMENTS.CONTRACTOR SHALL BE RESPONSIBLE FOR PROVIDING ALL TRENCHING FROM THE BUILDING TO THE STREET, BACKFILL, AND RESTORATION. CONTRACTOR SHALL COORDINATE WITH UGI FOR TRENCHING ACROSS THE STREET AND FOR INSTALLATION OF THE GAS LINE TO THE BUILDING AND SETTING THE METER. ENSURE GAS LINE AND LOD IS STRAIGHT RUN TO METER.

18. INSTALL NEW 16–INCH CL52 INFLUENT SEWER SO THAT THE PIPE IS RADIAL TO THE NEW 48–INCH MANHOLE. INSTALL NEW MANHOLE AND NEW 18–INCH CL52 INFLUENT SEWER, SO THAT THE INFLUENT PIPE IS RADIAL TO THE NEW 48–INCH MANHOLE AND PERPENDICULAR TO WETWELL.

19. THE PUMPING STATION DESIGN CAPACITY OF 3,300 GPM MUST REMAIN AVAILABLE FOR THE DURATION OF THE PROJECT. PROVIDE TEMPORARY BYPASS PUMPING AS NECESSARY TO COMPLETE THE NEW PUMP STATION. TEMPORARY BYPASS PUMPING AROUND THE PUMP STATION FOR A LIMITED DURATION OF THE PROJECT WAS ASSUMED BY THE ENGINEER; HOWEVER, IT IS SPECIFICALLY NOTED THAT MEANS AND METHODS OF CONSTRUCTION ARE THE CONTRACTOR'S RESPONSIBILITY. TEMPORARY BYPASS PIPING FROM THE EXISTING PUMP STATION DISCHARGE AROUND THE WORK AREAS FOR THE NEW PUMP STATION WAS ASSUMED BY THE ENGINEER FOR THE PROJECT DURATION. IT IS RECOMMENDED THAT THE CONTRACTOR PERFORM WHATEVER INVESTIGATION IT DEEMS NECESSARY TO UNDERSTAND WHAT IS GOING TO BE INVOLVED TO CONDUCT THIS WORK TO ITS OWN SATISFACTION. CONTRACTOR IS RESPONSIBLE FOR ANY TEMPORARY POWER AS MAY BE REQUIRED FOR TEMPORARY BYPASS PUMPING.

20. CONTRACTOR SHALL COORDINATE THE INSTALLATION OF THE NEW FENCING TO THE NEAREST EXISTING FENCE POST OUTSIDE OF THE EXISTING 100–YEAR FLOODPLAIN.

ALL DIMENSIONS AND EXISTING CONDITIONS SHALL BE CHECKED AND VERIFIED BY THE CONTRACTOR AT THE SITE.

NOTES:

21. SEE DWG, E2 FOR ELECTRICAL SITE IMPROVEMENTS.

22. THE NEW CREAMERY ROAD PUMPING STATION BUILDING HEIGHT IS 11'–10".

23. THE CURRENT ZONING DISTRICT IS INDUSTRIAL PARK (IP).

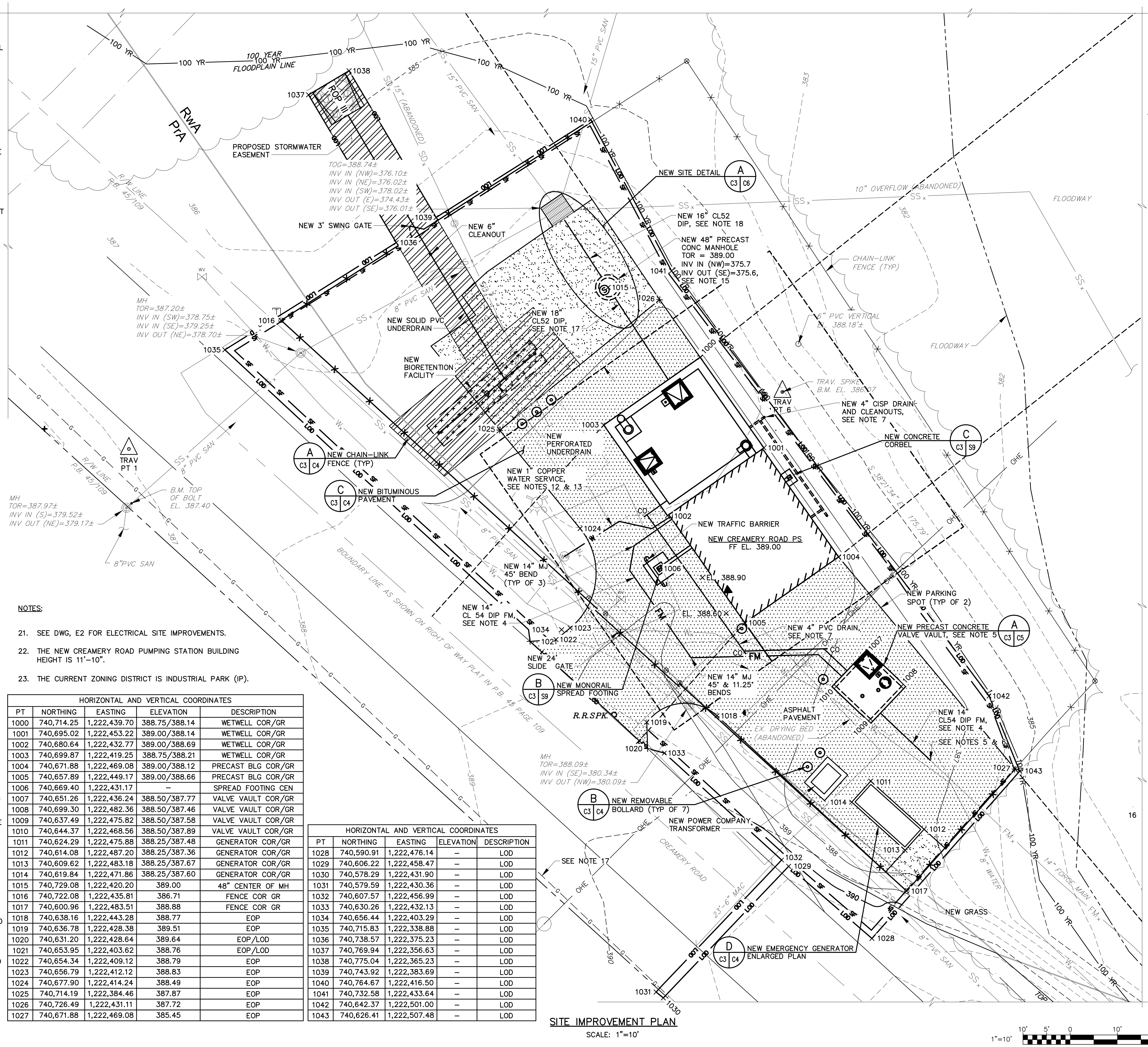

HORIZONTAL AND VERTICAL COORDINATES				
PT	NORTHING	EASTING	ELEVATION	DESCRIPTION
1000	740,714.25	1,222,439.70	388.75/388.14	WETWELL COR/GR
1001	740,695.02	1,222,453.22	389.00/388.14	WETWELL COR/GR
1002	740,680.64	1,222,432.77	389.00/388.69	WETWELL COR/GR
1003	740,699.87	1,222,419.25	388.75/388.21	WETWELL COR/GR
1004	740,671.88	1,222,469.08	389.00/388.12	PRECAST BLG COR/GR
1005	740,657.89	1,222,449.17	389.00/388.66	PRECAST BLG COR/GR
1006	740,669.40	1,222,431.17	–	SPREAD FOOTING CEN
1007	740,651.26	1,222,436.24	388.50/387.77	VALVE VAULT COR/GR
1008	740,699.30	1,222,482.36	388.50/387.46	VALVE VAULT COR/GR
1009	740,637.49	1,222,475.82	388.50/387.58	VALVE VAULT COR/GR
1010	740,644.37	1,222,468.56	388.50/387.89	VALVE VAULT COR/GR
1011	740,624.29	1,222,475.88	388.25/387.48	GENERATOR COR/GR
1012	740,614.08	1,222,487.20	388.25/387.36	GENERATOR COR/GR
1013	740,609.62	1,222,483.18	388.25/387.67	GENERATOR COR/GR
1014	740,619.84	1,222,471.86	388.25/387.60	GENERATOR COR/GR
1015	740,729.08	1,222,420.20	389.00	48" CENTER OF MH
1016	740,722.08	1,222,435.81	386.71	FENCE COR GR
1017	740,600.96	1,222,483.51	388.88	FENCE COR GR
1018	740,638.16	1,222,443.28	388.77	EOP
1019	740,636.78	1,222,428.38	389.51	EOP
1020	740,631.20	1,222,428.64	389.64	EOP/LOD
1021	740,653.95	1,222,403.62	388.76	EOP/LOD
1022	740,654.34	1,222,409.12	388.79	EOP
1023	740,656.79	1,222,412.12	388.83	EOP
1024	740,677.90	1,222,414.24	388.49	EOP
1025	740,714.19	1,222,384.46	387.87	EOP
1026	740,726.49	1,222,431.11	387.72	EOP
1027	740,671.88	1,222,469.08	385.45	EOP

HORIZONTAL AND VERTICAL COORDINATES				
PT	NORTHING	EASTING	ELEVATION	DESCRIPTION
1028	740,590.91	1,222,476.14	–	LOD
1029	740,606.22	1,222,458.47	–	LOD
1030	740,578.29	1,222,431.90	–	LOD
1031	740,579.59	1,222,430.36	–	LOD
1032	740,607.57	1,222,456.99	–	LOD
1033	740,630.26	1,222,432.13	–	LOD
1034	740,656.44	1,222,403.29	–	LOD
1035	740,715.83	1,222,338.88	–	LOD
1036	740,738.57	1,222,375.23	–	LOD
1037	740,769.94	1,222,356.63	–	LOD
1038	740,775.04	1,222,365.23	–	LOD
1039	740,743.92	1,222,383.69	–	LOD
1040	740,764.67	1,222,416.50	–	LOD
1041	740,732.58	1,222,433.64	–	LOD
1042	740,642.37	1,222,501.00	–	LOD
1043	740,626.41	1,222,507.48	–	LOD

SITE IMPROVEMENT PLAN

SCALE: 1"=10'

1"=10' 10' 5' 0 10' 20'

PROFESSIONAL CERTIFICATION

I HEREBY CERTIFY THAT THESE DOCUMENTS WERE PREPARED OR APPROVED BY ME, AND THAT I AM A DULY LICENSED PROFESSIONAL ENGINEER UNDER THE LAWS OF THE STATE OF MARYLAND. LICENSE NO. 22765 EXPIRATION DATE 07/09/2024

01/25/2023

RK&K 700 EAST PRATT STREET, SUITE 500 BALTIMORE, MARYLAND 21202 800.787.3755

NO.	DESCRIPTION	BY	DATE
REVISIONS			

TOWN OF EMMITSBURG, MARYLAND
NEW CREAMERY ROAD SEWAGE PUMP STATION
EMMITSBURG, MARYLAND

GRADING AND SITE IMPROVEMENT PLAN

ENGINEER	CHECKED BY
JSG	RAL
DRAWN BY	DATE
JAB	1/2023
RK&K PROJECT NUMBER	
19082	

DRAWING NUMBER
C3
SHEET NO. 6 OF 60

RKK21\SYS – \\ad.rkk.com\fs\Cloud\Projects\2019\19082_CreameryPS\Cadd\Plans\Civil\19082CR-004-CP-C1-SC7.dwg Jan 27, 2023 – 8:54am Plot Scale 1:1

Division of Planning and Permitting
Department of Development
Review Engineering

APPROVED: 06/01/22

Signature:

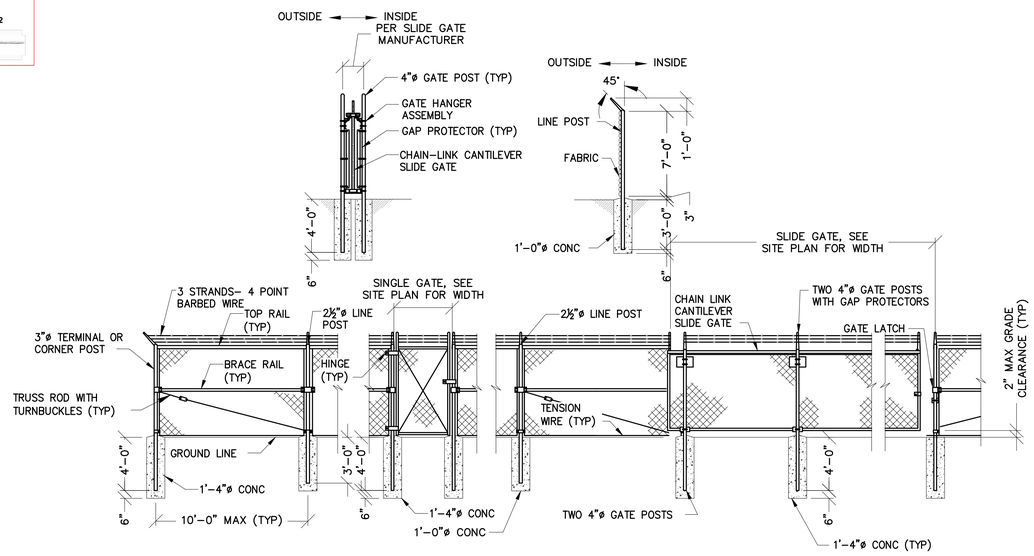

NOTE:

1. THE BOTTOM OF THE FABRIC SHALL BE TO FINISHED GRADE, BUT NOT MORE THAN 2" ABOVE THE GROUND.

CHAIN-LINK FENCE DETAIL (A) — NTS

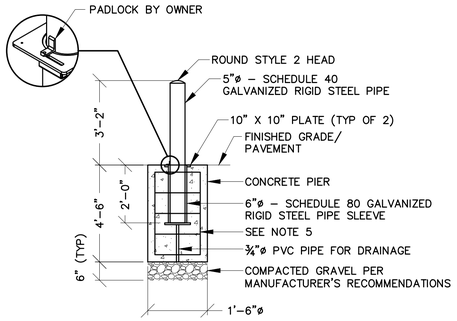

NOTES:

1. PIPE BOLLARD SPACING NOT TO EXCEED 4'-0" O.C. MAX.
2. BOLLARD SHALL BE SECURED TO THE PIPE SLEEVE ASSEMBLY BY A PADLOCK. PADLOCKS WILL BE PROVIDED BY THE OWNER.
3. BOLLARD SHALL RECEIVE A FACTORY APPLIED POWDER COAT, AND SHALL BE SAFETY YELLOW.
4. REMOVABLE BOLLARD AND BASE ASSEMBLY SHALL BE MODEL MR-HP-RS2-HD AS MANUFACTURED BY BLUE EMBER TECHNOLOGIES, LLC, OR APPROVED EQUAL.
5. CONCRETE PIER REINFORCEMENT STEEL SHALL BE FOUR (4) #4 VERTICAL BARS, #3 HOOP TIES AT 12" SPACING, WITH TWO (2) #3 HOOP TIES AT TOP AND BOTTOM OF PIER.

REMOVABLE BOLLARD DETAIL (B) — NTS

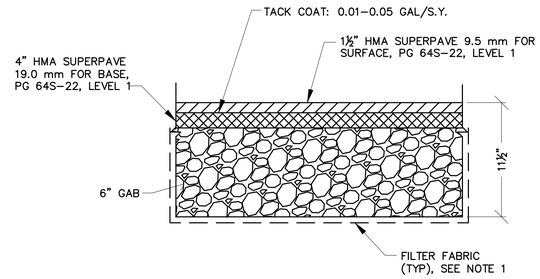

NOTE:

1. EDGE OF EXCAVATION AND PLACEMENT OF FILTER FABRIC SHALL BE AS CLOSE TO VERTICAL AS POSSIBLE.

BITUMINOUS PAVEMENT DETAIL (C) — NTS

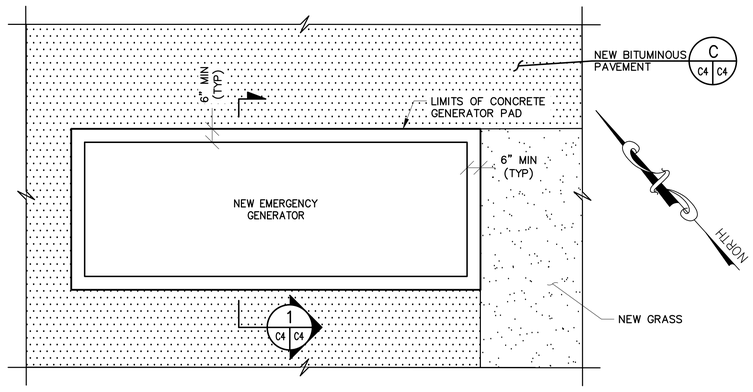

NOTES:

1. EMERGENCY GENERATOR PAD DESIGNED FOR A MAXIMUM BEARING PRESSURE OF 2,000 PSF.
2. CONTRACTOR SHALL SUBMIT FINAL PAD DIMENSIONS, BASED ON EMERGENCY GENERATOR PROVIDED, TO THE ENGINEER FOR APPROVAL.
3. MINIMUM REINFORCEMENT BAR COVER SHALL BE 2" UNLESS NOTED OTHERWISE, WITH THE EXCEPTION OF BARS IN CONCRETE PLACED AGAINST GROUND WHICH SHALL BE 3".
4. PROVIDE BEARING PADS BENEATH GENERATOR STEEL FRAME AS RECOMMENDED BY GENERATOR MANUFACTURER.
5. CONCRETE GENERATOR PAD HAS BEEN DESIGNED BASED ON THE GENERATOR NAMED IN THE SPECIFICATIONS. IF CONTRACTOR PROPOSES A GENERATOR, INCLUDING THOSE "EQUAL BY", OTHER THAN WHAT IS NAMED IN THE SPECIFICATIONS, HE SHALL SUBMIT A DESIGN TO MODIFY THE CONCRETE PAD TO ACCOMMODATE THE PROPOSED GENERATOR TO THE ENGINEER FOR APPROVAL. ANY SUCH MODIFICATIONS SHALL BE AT NO ADDITIONAL COST TO THE TOWN. THE GENERATOR PAD DESIGN SHALL BE SIGNED AND SEALED BY A PROFESSIONAL ENGINEER REGISTERED IN THE STATE OF MARYLAND.
6. SEE DWG. C3 FOR PUMPING STATION SITE PLAN.
7. PROVIDE MINIMUM 3'-6" CLEARANCE AROUND GENERATOR ALL SIDES.

EMERGENCY GENERATOR ENLARGED PLAN DETAIL (D) — SCALE: ⅜"=1'-0"

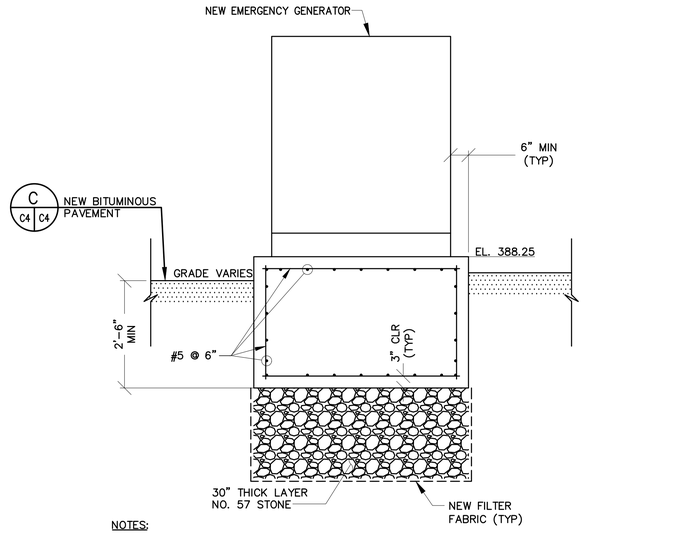

NOTES:

1. EMERGENCY GENERATOR PAD DESIGNED FOR A MAXIMUM BEARING PRESSURE OF 2,500 PSF.
2. CONTRACTOR SHALL SUBMIT FINAL PAD DIMENSIONS, BASED ON EMERGENCY GENERATOR PROVIDED, TO THE ENGINEER FOR APPROVAL.
3. MINIMUM REINFORCEMENT BAR COVER SHALL BE 2" UNLESS NOTED OTHERWISE, WITH THE EXCEPTION OF BARS IN CONCRETE PLACED AGAINST GROUND WHICH SHALL BE 3".

SECTION (1) — SCALE: ½"=1'-0"

ALL DIMENSIONS AND EXISTING CONDITIONS SHALL BE CHECKED AND VERIFIED BY THE CONTRACTOR AT THE SITE.

⅜"=1'-0" 24" 12" 0 2' 4' 6'

½"=1'-0" 12" 0 1' 2' 3' 4' 5'

PROFESSIONAL CERTIFICATION
I HEREBY CERTIFY THAT THESE DOCUMENTS WERE PREPARED OR APPROVED BY ME, AND THAT I AM A DULY LICENSED PROFESSIONAL ENGINEER UNDER THE LAWS OF THE STATE OF MARYLAND.
LICENSE NO. 22765
EXPIRATION DATE 07/09/2024
01/25/2023

RK&K
700 EAST PRATT STREET, SUITE 500
BALTIMORE, MARYLAND 21202
800.787.3755

NO.	DESCRIPTION	BY	DATE
	REVISIONS		

TOWN OF EMMITSBURG, MARYLAND
NEW CREAMERY ROAD SEWAGE PUMP STATION
EMMITSBURG, MARYLAND

MISCELLANEOUS SITE DETAILS

ENGINEER	CHECKED BY
JSG	RAL
DRAWN BY	DATE
JAB	1/2023
RK&K PROJECT NUMBER	
19082	

DRAWING NUMBER
C4
SHEET NO. 7 OF 60

RK&K\SYS - \\pd.rkk.com\hfs\Docs\Projects\2019\19082_Creamery\PS\Cadd\Plans\Civil\19082SR-007-CP-C4.dwg Jan 27, 2023 - 8:59am Plot Scale 1:1

Division of Planning and Permitting
Department of Development
Review Engineering

APPROVED: 06/01/22

Signature:

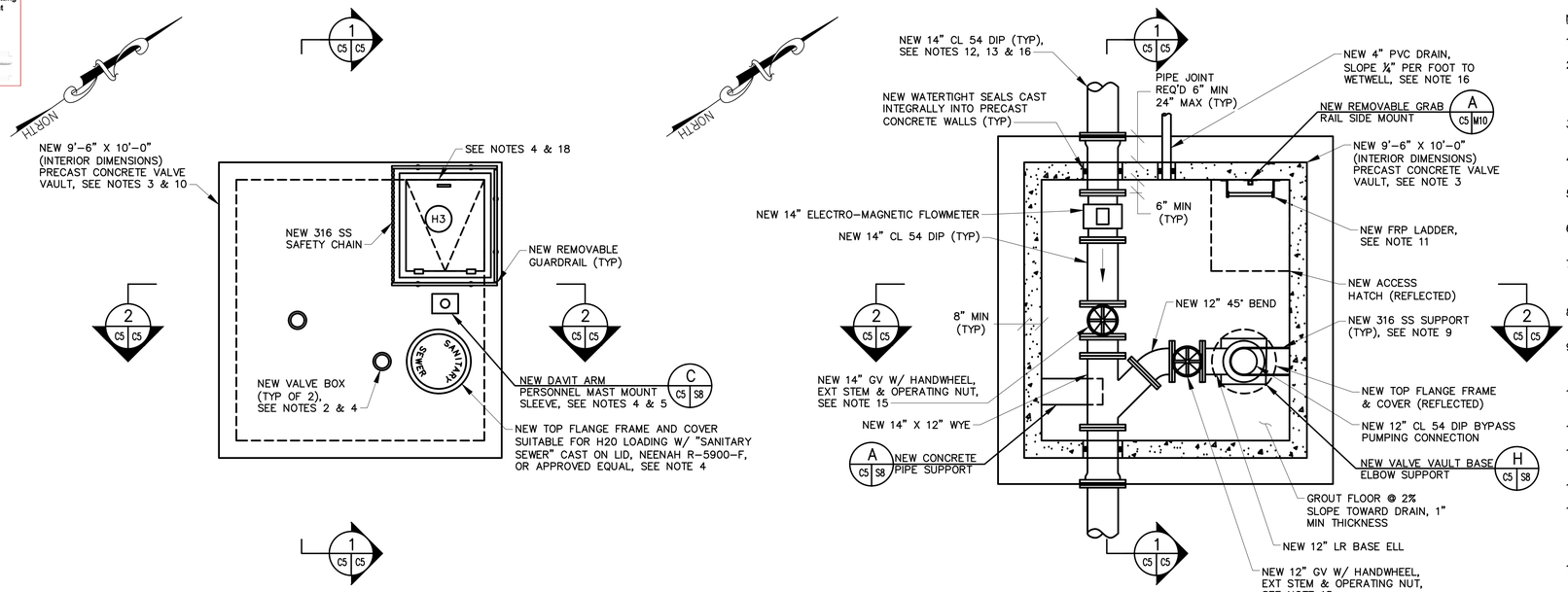

PRECAST CONCRETE VALVE VAULT DETAIL A C3 C5
SCALE: ⅜"=1'–0"

NOTES:

1. ALL EXISTING FEATURES DENOTED BY SLANTED TEXT.
2. COORDINATE LOCATION OF VALVE BOXES WITH EXTENSION STEMS FOR VALVES FURNISHED. ENSURE THAT THE LOCATION OF THE VALVE BOXES PERMIT FULL ACCESS AND OPERATION OF THE OPERATING NUT/POSITION INDICATOR. THE CONTRACTOR SHALL PROVIDE ALL GEARS, UNIVERSAL JOINTS AND ADAPTERS NECESSARY FOR ADJUSTING THE ALIGNMENT OF THE EXTENSION STEMS.
3. PRECAST CONCRETE VALVE VAULT SHALL BE DESIGNED IN ACCORDANCE WITH SPECIFICATION SECTION 03410 – PRECAST STRUCTURAL CONCRETE.
4. NEW ACCESS HATCH FRAME, SOCKET MOUNTS, TOP FLANGE FRAME AND COVER, AND VALVE BOXES SHALL BE CAST FLUSH INTO NEW PRECAST CONCRETE TOP SLAB IN LOCATIONS SHOWN.
5. LOCATE DAVIT ARM PERSONNEL MAST SUCH THAT THE HOOK WILL BE CENTERED OVER THE ACCESS HATCH OPENING TO THE EXTENT POSSIBLE, BUT NO LESS THAN 15 INCHES FROM EDGE OF THE OPENING.
6. EDGE OF EXCAVATION AND PLACEMENT OF FILTER FABRIC SHALL BE AS CLOSE TO VERTICAL AS POSSIBLE. ALL STONE FILL SHALL BE WRAPPED WITH FILTER FABRIC.
7. INSTALL EXTENSION STEMS AND STEM GUIDES/SUPPORTS IN ACCORDANCE WITH MANUFACTURER RECOMMENDATIONS. MAXIMUM SPACING OF STEM GUIDES SHALL BE 8'–0", UNLESS RECOMMENDED OTHERWISE BY THE VALVE MANUFACTURER.
8. CLEAN AND PAINT ALL PIPE, VALVES, FITTINGS, FERROUS METALS AND INTERIOR CONCRETE IN ACCORDANCE WITH SPECIFICATION SECTION 09900.
9. NO ATTEMPT HAS BEEN MADE TO SHOW ALL REQUIRED PIPE SUPPORTS. CONTRACTOR SHALL BE RESPONSIBLE FOR PROVIDING A COMPLETE PIPING SUPPORT SYSTEM COMPLYING WITH MSS–SP–58, FEDERAL SPECIFICATION WW–H–171E, AND SPECIFICATION SECTION 15060.
10. PRECAST VALVE VAULT TOP SLAB SHALL BE DESIGNED TO WITHSTAND ALL APPLICABLE LOADS RESULTING FROM THE DAVIT ARM PERSONNEL MAST.
11. FRP LADDER SHALL BE PROVIDED WITH EQUAL RUNG SPACING AT 1'–0" MAX.
12. FIELD VERIFY FORCE MAIN LOCATION AND ELEVATION AT THE CONNECTION POINT BY TEST PITTING PRIOR TO SUBMITTING THE PIPING LAYOUT DRAWINGS AND PRECAST CONCRETE STRUCTURE SUBMITTALS.
13. ALL FORCE MAIN AND DISCHARGE PIPING JOINTS SHALL BE RESTRAINED.
14. NEW PIPING, VALVE AND FITTING ARRANGEMENT IS DEPENDENT ON ACTUAL EQUIPMENT FURNISHED. CONTRACTOR SHALL COORDINATE WITH MANUFACTURER OF EQUIPMENT FURNISHED, TAKE ACCURATE FIELD MEASUREMENTS AND PREPARE AND SUBMIT LAYOUT DRAWINGS FOR REVIEW PRIOR TO PURCHASING ANY EQUIPMENT OR FABRICATING ANY PIPING.
15. SUPPORT ALL HORIZONTALLY INSTALLED VALVES WITH AN ADJUSTABLE FLOOR MOUNTED PIPE SUPPORT, INSTALLED SO AS NOT TO INTERFERE WITH THE OPERATION OF THE VALVE.
16. SEE SITE PLANS FOR CONTINUATION OF FORCE MAIN AND DRAIN PIPING.
17. PRECAST CONCRETE STRUCTURE JOINT LOCATIONS SHALL BE COORDINATED SO THAT THEY ARE A MINIMUM OF 1–FOOT CLEAR OF ALL PIPE PENETRATIONS.
18. VERIFY THAT HATCH SIZE AND LOCATION WILL PERMIT REMOVAL/INSTALLATION OF EQUIPMENT WITHIN THE VALVE VAULT. HATCH SIZE IS DEPENDENT ON ACTUAL EQUIPMENT FURNISHED.
19. SEE DWG. M9 FOR ALL MECHANICAL SCHEDULES.

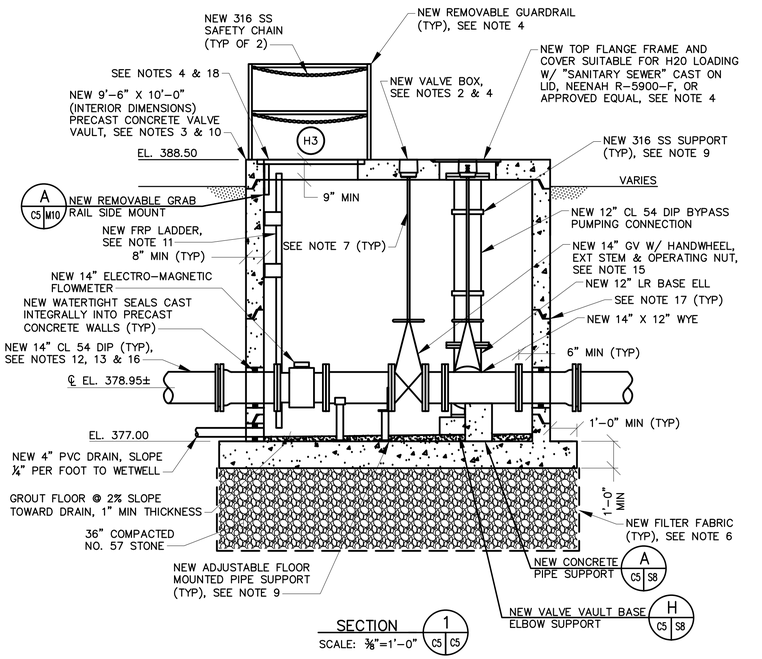

SECTION 1 C5 C5
SCALE: ⅜"=1'–0"

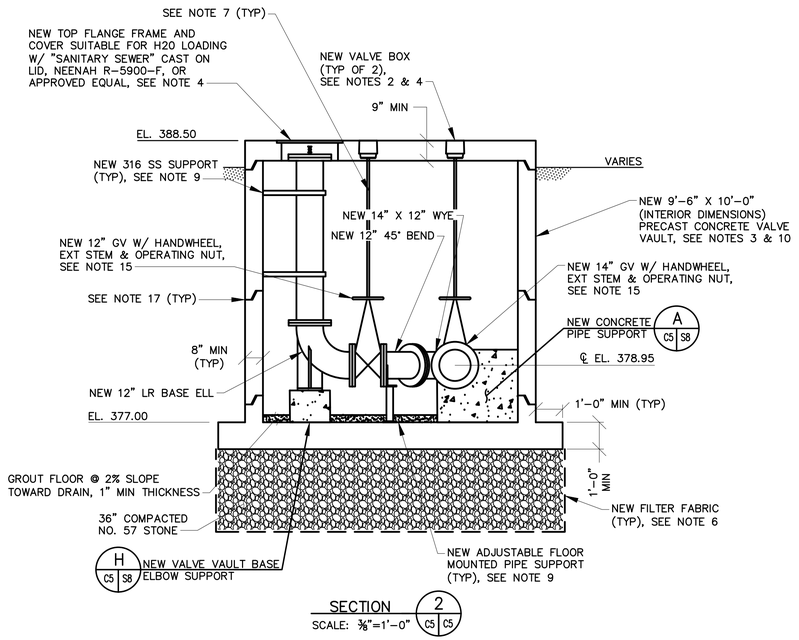

SECTION 2 C5 C5
SCALE: ⅜"=1'–0"

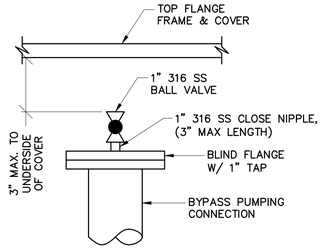

TYPICAL BYPASS PUMPING CONNECTION DETAIL
NTS

ALL DIMENSIONS AND EXISTING CONDITIONS SHALL BE CHECKED AND VERIFIED BY THE CONTRACTOR AT THE SITE.

⅜"=1'–0" 24" 12" 0 2' 4' 6'

RK&K 21 SYS = \\pd-rkk.com\16\Dcs4\Projects\2019\19082_Crommer\PS\Civil\Revit\Civil\19082R-008-cP--C5.dwg Jan 27, 2023 - 8:59am Plot Scale 1:1

PROFESSIONAL CERTIFICATION
I HEREBY CERTIFY THAT THESE DOCUMENTS WERE PREPARED OR APPROVED BY ME, AND THAT I AM A DULY LICENSED PROFESSIONAL ENGINEER UNDER THE LAWS OF THE STATE OF MARYLAND.
LICENSE NO. 22765
EXPIRATION DATE 07/09/2024
01/25/2023
700 EAST PRATT STREET, SUITE 500
BALTIMORE, MARYLAND 21202
800.787.3755
RK&K

NO.	DESCRIPTION	BY	DATE
REVISIONS			

TOWN OF EMMITSBURG, MARYLAND
NEW CREAMERY ROAD SEWAGE PUMP STATION
EMMITSBURG, MARYLAND

MISCELLANEOUS SITE DETAILS

ENGINEER	CHECKED BY
JSG	RAL
DRAWN BY	DATE
JAB	1/2023
RK&K PROJECT NUMBER	
19082	

DRAWING NUMBER
C5
SHEET NO. 8 OF 60

Division of Planning and Permitting
Department of Development
Review Engineering
APPROVED: 06/03/22
Signature:

NOTES:

1. ALL EXISTING FEATURES DENOTED BY SLANTED TEXT.

2. CONNECT NEW 16–INCH MECHANICAL JOINT DUCTILE IRON SOLID SLEEVE TO EXISTING 16–INCH INFLUENT SEWER PIPE. FURNISH AND INSTALL ALL ADAPTERS, COUPLINGS, GLANDS, RETAINERS, GASKETS, BOLTS AND OTHER MISCELLANEOUS MATERIALS NECESSARY TO MAKE CONNECTION.

3. FILL EXISTING STRUCTURE WITH NEW NO. 57 STONE.

4. INSTALL NEW PRECAST CONCRETE MANHOLE IN ACCORDANCE WITH FREDERICK COUNTY STANDARD DETAIL PLATE 201.1 (PRECAST CONCRETE MANHOLE DETAIL 48" DIAMETER) WITH STANDARD MH FRAME AND COVER. STANDARD MANHOLE FRAME AND COVER SHALL BE IN ACCORDANCE WITH FREDERICK COUNTY STANDARD DETAIL PLATE 5.1, MH FRAME LETTERING SHALL BE "SANITARY SEWER".

5. TAKE ACCURATE FIELD MEASUREMENTS TO CONFIRM INVERT ELEVATIONS AND MAINTAIN 2% SLOPE OF NEW 16" CL52 DIP SEWER TO NEW MANHOLE.

6. MAINTAIN MINIMUM 1.1% SLOPE TO NEW WETWELL. INVERT ELEVATION = 375.25 AT WETWELL. SUBMIT UPON NEW INVERT ELEVATIONS AND PIPE SLOPE TO THE ENGINEER FOR APPROVAL PRIOR TO ORDERING MATERIALS.

7. TAKE ACCURATE FIELD MEASUREMENTS AND PROVIDE NEW 1" REMOVABLE GRATING WITH ANGLE SUPPORTS AS NECESSARY TO COVER ENTIRE OPENING OF THE RECEIVING CHAMBER IN ACCORDANCE WITH SPECIFICATION SECTION 05500.

8. CONTRACTOR SHALL BREAK UP THE EXISTING CONCRETE FLOOR OR CORE DRILL 12–INCH DIAMETER OPENINGS IN THE SUBSTRUCTURE FLOOR PRIOR TO FILL OF THE REMAINING SUBSTRUCTURE WITH NO. 57 STONE TO THREE (3) FEET BELOW FINISHED FLOOR ELEVATION. CORE DRILL HOLES SHALL BE EVENLY SPACED ON BOTTOM FLOOR AND ONE CORE DRILL PROVIDED FOR EACH FOUR FOOT SQUARE AREA ON THE FLOOR.

9. THE EXISTING PUMP STATION ELEVATIONS SHOWN ARE BASED ON PLANS ENTITLED "TOWN OF EMMITSBURG, MARYLAND WASTEWATER TREATMENT FACILITY", CONTRACT NO. 85–01–S, REVISED TO AS–BUILT CONDITIONS, JANUARY 1990, AS PROVIDED BY THE TOWN OF EMMITSBURG. AN ADJUSTMENT OF –0.76' WAS APPLIED TO THE BOTTOM SLAB ELEVATION PROVIDED ON THE AS–BUILT DRAWINGS. THE CONTRACTOR IS RESPONSIBLE FOR VERIFYING THE ADJUSTMENT FACTOR AND MAKING ALL NECESSARY ADJUSTMENTS IN ELEVATIONS.

10. INSTALL 18–INCH CL52 SEWER LINE IN ACCORDANCE WITH FREDERICK COUNTY STANDARD DETAIL PLATE NO. 2.1 (TYPICAL TRENCH FOR SEWER OR WATER LINES).

11. SEE DWG. C3 FOR A CONTINUATION OF THE INFLUENT SEWER LINE.

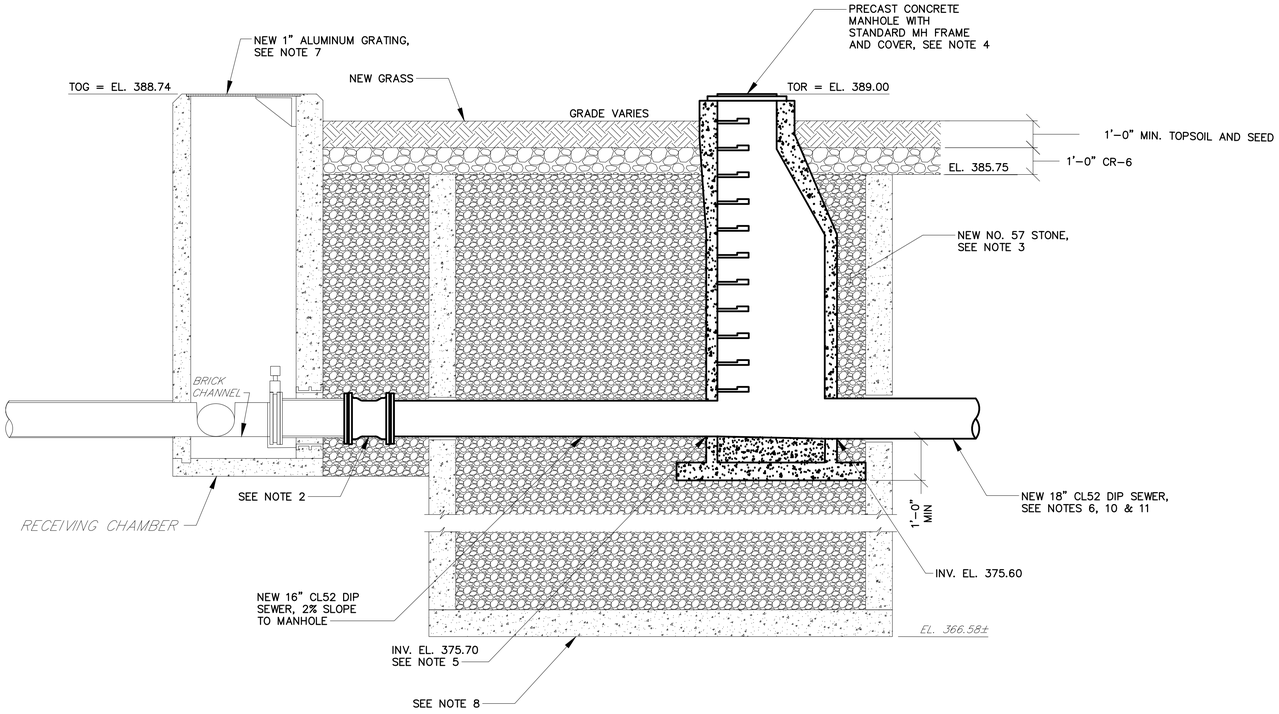

SITE DETAIL A
SCALE: 3/8"=1'–0" C3 C6

ALL DIMENSIONS AND EXISTING CONDITIONS SHALL BE CHECKED AND VERIFIED BY THE CONTRACTOR AT THE SITE.

3/8"=1'–0" 24" 12" 0 2' 4' 6'

RK&K
700 EAST PRATT STREET, SUITE 500
BALTIMORE, MARYLAND 21202
800.787.3755

PROFESSIONAL CERTIFICATION

I HEREBY CERTIFY THAT THESE DOCUMENTS WERE PREPARED OR APPROVED BY ME, AND THAT I AM A DULY LICENSED PROFESSIONAL ENGINEER UNDER THE LAWS OF THE STATE OF MARYLAND. LICENSE NO. 22765 EXPIRATION DATE 07/09/2024

01/25/2023

NO.	DESCRIPTION	BY	DATE
	REVISIONS		

TOWN OF EMMITSBURG, MARYLAND
NEW CREAMERY ROAD SEWAGE PUMP STATION
EMMITSBURG, MARYLAND

SITE DETAIL

ENGINEER	CHECKED BY
JSG	RAL
DRAWN BY	DATE
JAB	1/2023
RK&K PROJECT NUMBER	
19082	

DRAWING NUMBER
C6
SHEET NO. 9 OF 60

RK&K 21.SYS – \\adt4k.com\1A\Cloud\Projects\2019\19082_Creamery\PS\Cadd\Plans\Civil\19082R–009–CP–C6.dwg Jan 27, 2023 – 9:00am Plot Scale 1:1

Division of Planning and Permitting
Department of Development
Review Engineering

APPROVED: 06/01/22

Signature:

FORCE MAIN			
Point	North	East	Description
3B	679,617	710,414	℄ Pipe
4B	679,587	710,460	11 1/4° V. Bend
5B	679,367	710,805	Air Release Valve & Vault
6B	679,362	711,120	Air Release Valve & Vault
7B	679,363	711,188	22 1/2° H. Bend

WATER MAIN			
Point	North	East	Description
21A	679,580	710,451	11 1/4° V. Bend
22A	679,465	710,634	8" Coupling
23A	679,365	710,787	8" Tee
24A	679,360	710,783	Fire Hydrant
25A	679,356	710,808	45° H. Bend
26A	679,359	711,090	22 1/2° V. Bend
27A	679,360	711,097	45° H. Bend
28A	679,352	711,103	45° H. Bend
29A	679,350	711,177	8" Coupling
30A	679,350	711,193	22 1/2° H. Bend

NOTE:

REFERENCED HORIZONTAL COORDINATES SHOWN ARE BASED ON PLANS ENTITLED "TOWN OF EMMITSBURG, MARYLAND WASTEWATER TREATMENT FACILITY", CONTRACT NO. 85-01-S, REVISED TO AS-BUILT CONDITIONS. REFERENCED LOCATIONS ARE BASED ON THE MARYLAND STATE COORDINATE SYSTEM NAD27. CONTRACTOR SHALL CONVERT ALL LOCATIONS TO THE MARYLAND STATE COORDINATE SYSTEM NAD83.

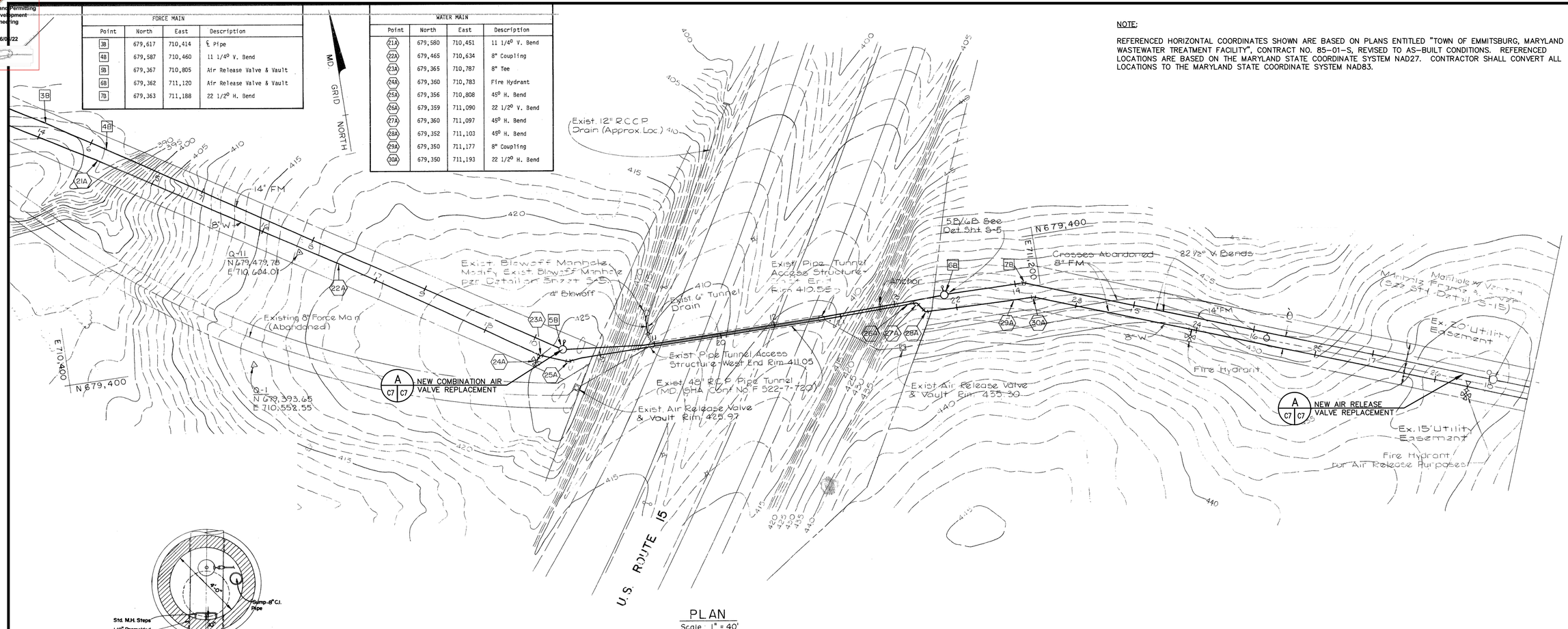

PLAN

Scale : 1" = 40'

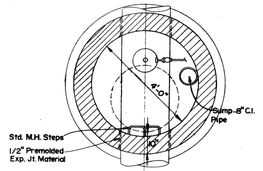

PLAN

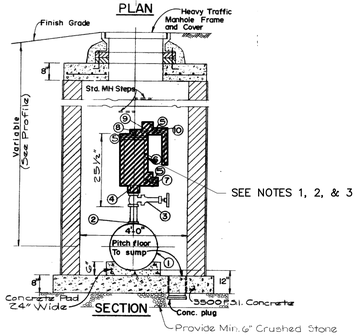

SECTION

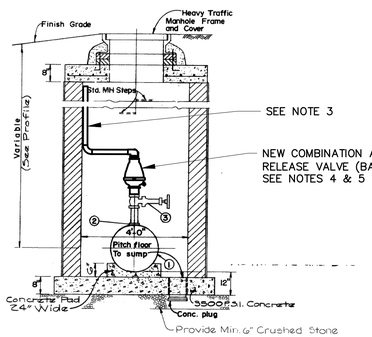

DEMOLITION

IMPROVEMENT

NOTES:

1. CONTRACTOR SHALL REMOVE EXISTING AIR RELEASE VALVE, PIPE NIPPLE, AND ALL APPURTENANCES TO PREPARE FOR INSTALLATION OF NEW 316 SS PIPE NIPPLE AND NEW CAV. PROVIDE ALL FITTINGS AS REQUIRED TO CONNECT TO EXISTING ISOLATION VALVE.
2. INSTALL NEW 2" 316 SS PIPE NIPPLE AND NEW 2" CAV WITH NON-SLAM ORIFICE.
3. INSTALL 2" SCH 80 PVC PIPING AND BENDS AS REQUIRED TO ENSURE PIPE OUTLET IS WITHIN 1" OF MANHOLE FRAME AND PROVIDE SUPPORT AS REQUIRED. PVC PIPING SHALL BE LOCATED SO AS TO NOT INTERFERE WITH ENTRY/EXIT FROM MANHOLE.
4. LOCATION OF COMBINATION AIR VALVE REPLACEMENT IS LOCATED AT APPROXIMATELY 740,117 NORTHING, 1,223,225 EASTING BASED ON THE MARYLAND STATE COORDINATE SYSTEM NAD83.
5. LOCATION OF AIR RELEASE VALVE REPLACEMENT IS LOCATED AT APPROXIMATELY 739,980 NORTHING, 1,223,957 EASTING BASED ON THE MARYLAND STATE COORDINATE SYSTEM NAD83.

COMBINATION AIR VALVE/AIR RELEASE VALVE REPLACEMENT DETAIL (A / C7 C7)

SCALE: ⅜" = 1'-0"

ALL DIMENSIONS AND EXISTING CONDITIONS SHALL BE CHECKED AND VERIFIED BY THE CONTRACTOR AT THE SITE.

⅜"=1'-0" 24" 12" 0 2' 4' 6'

1"=40' 40' 20' 0 40' 80'

PROFESSIONAL CERTIFICATION

I HEREBY CERTIFY THAT THESE DOCUMENTS WERE PREPARED OR APPROVED BY ME, AND THAT I AM A DULY LICENSED PROFESSIONAL ENGINEER UNDER THE LAWS OF THE STATE OF MARYLAND. LICENSE NO. 22765 EXPIRATION DATE 07/09/2024

01/25/2023

RK&K
700 EAST PRATT STREET, SUITE 500
BALTIMORE, MARYLAND 21202
800.787.3765

NO.	DESCRIPTION	BY	DATE
	REVISIONS		

TOWN OF EMMITSBURG, MARYLAND
NEW CREAMERY ROAD SEWAGE PUMP STATION
EMMITSBURG, MARYLAND

FORCE MAIN VALVE VAULT IMPROVEMENTS

ENGINEER	CHECKED BY
JSG	RAL
DRAWN BY	DATE
JAB	1/2023
RK&K PROJECT NUMBER	
19082	

DRAWING NUMBER

C7

SHEET NO. 10 OF 60

RK&K\31.SYS = \\pdrkk.com\16\Docs\Projects\2019\19082_Creamery\PS\Civil\Plans\Civil\190825-010-05-C7.dwg Jan 27, 2023 - 9:02am Plot Scale 1:1

Division of Planning and Permitting
Department of Development
Review Engineering

APPROVED: 06/01/22

Signature:

GENERAL NOTES:

1. STORMWATER MANAGEMENT REQUIREMENTS AT THE SITE HAVE BEEN ADDRESSED THROUGH USE OF THE PROPOSED BIORETENTION FACILITY.

   FOR BIORETENTION AND DRYWELL DETAILS, SEE SHEET SWM2 AND SWM3.

3. 95% OF SOILS ON SITE ARE RwA. 5% OF SOILS ON THE SITE ARE PrA.

4. QUANTITY CONTROL FOR THE PROJECT SITE HAS BEEN ACHIEVED THROUGH A SLIGHT REDUCTION IN IMPERVIOUS COVER. THE SITE IS CATEGORIZED AS REDEVELOPMENT IN ACCORDANCE WITH THE MDE 2009 STORMWATER DESIGN MANUAL.

5. FOR UNDERGROUND PIPING SYSTEMS SEE SHEET C2,

HORIZONTAL AND VERTICAL COORDINATES				
PT	NORTHING	EASTING	ELEVATION	DESCRIPTION
1037	740,769.94	1,222,356.63	–	EASEMENT COR
1038	740,775.04	1,222,365.23	–	EASEMENT COR
1044	740,719.69	1,222,398.06	–	EASEMENT COR
1045	740,724.85	1,222,404.31	–	EASEMENT COR
1046	740,712.73	1,222,414.21	–	EASEMENT COR
1047	740,689.01	1,222,385.44	–	EASEMENT COR
1048	740,699.65	1,222,373.75	–	EASEMENT COR
1049	740,713.26	1,222,390.25	–	EASEMENT COR

LEGEND

PROPOSED PAVEMENT

APPROXIMATE FLOW PATH

PROPOSED BIORETENTION FILTER AREA

SITE SWM SUMMARY TABLE		
SITE AREA	AC	0.29
DISTURBANCE AREA	AC	0.16
EXISTING IMPERVIOUS	AC	0.13
PROPOSED IMPERVIOUS	AC	0.13
TOTAL IMPERVIOUS	AC	0.13
SITE Pe	INCHES	1.0
DEVELOPMENT TYPE	REDEVELOPMENT	
ESDv REQUIRED	CF	227
ESDv PROVIDED	CF	240

BORING COORDINATES			
PT	NORTHING	EASTING	ELEVATION
B–1	740,703.93	1,222,390.40	386.8
B–2	740,696.13	1,222,452.81	387.6
SWM–1	740,761.04	1,222,363.02	385.3
I–1	740,761.02	1,222,368.47	385.3
I–2	740,706.32	1,222,384.72	387.1

ESD Practices (Chapter 5 – Structure & Non–Structural)													
TYPE	NO.	DA (ACRES) (To Structure)	IMPERVIOUS DA (ACRES) (To Structure)	TARGET Pe (INCHES)	PROVIDED Pe (INCHES)	ESDv REQUIRED	ESDv PROVIDED	WQv (CF)	CPv (CF)	CPv (cfs) (Discharge)	Rev (CF)	TIME OF CONCENTRATION	Q10 (CFS)
BIORETENTION	1	0.287	0.131	1.0	1.0	227	240	240	N/A	N/A	N/A	N/A	N/A

ALL DIMENSIONS AND EXISTING CONDITIONS
SHALL BE CHECKED AND VERIFIED BY THE CONTRACTOR AT THE SITE.

PLAN
SCALE: 1"=10'

1"=10'

NORTH

PROFESSIONAL CERTIFICATION

I HEREBY CERTIFY THAT THESE DOCUMENTS WERE PREPARED OR APPROVED BY ME, AND THAT I AM A DULY LICENSED PROFESSIONAL ENGINEER UNDER THE LAWS OF THE STATE OF MARYLAND. LICENSE NO. 22765 EXPIRATION DATE 07/09/2024

01/25/2023

RK&K
700 EAST PRATT STREET, SUITE 500
BALTIMORE, MARYLAND 21202
800.787.3765

NO.	DESCRIPTION	BY	DATE
	REVISIONS		

TOWN OF EMMITSBURG, MARYLAND
NEW CREAMERY ROAD SEWAGE PUMP STATION
EMMITSBURG, MARYLAND

STORMWATER MANAGEMENT PLAN

ENGINEER	CHECKED BY
JSG	RAL
DRAWN BY	DATE
JAB	1/2023
RK&K PROJECT NUMBER	
19082	

DRAWING NUMBER
SWM1
SHEET NO. 11 OF 60

RK&K\\ 12/5 – \\vdc4k.com\IA\Cloud\Projects\2019\19082_Creamery\PS\Civil\Plans\Civil\19082PS–004–CP–C1–SC7.dwg Jan 27, 2023 – 8:54am Plot Scale 1:1

Division of Planning and Permitting
Department of Development
Review Engineering
APPROVED: 06/01/22
Signature:

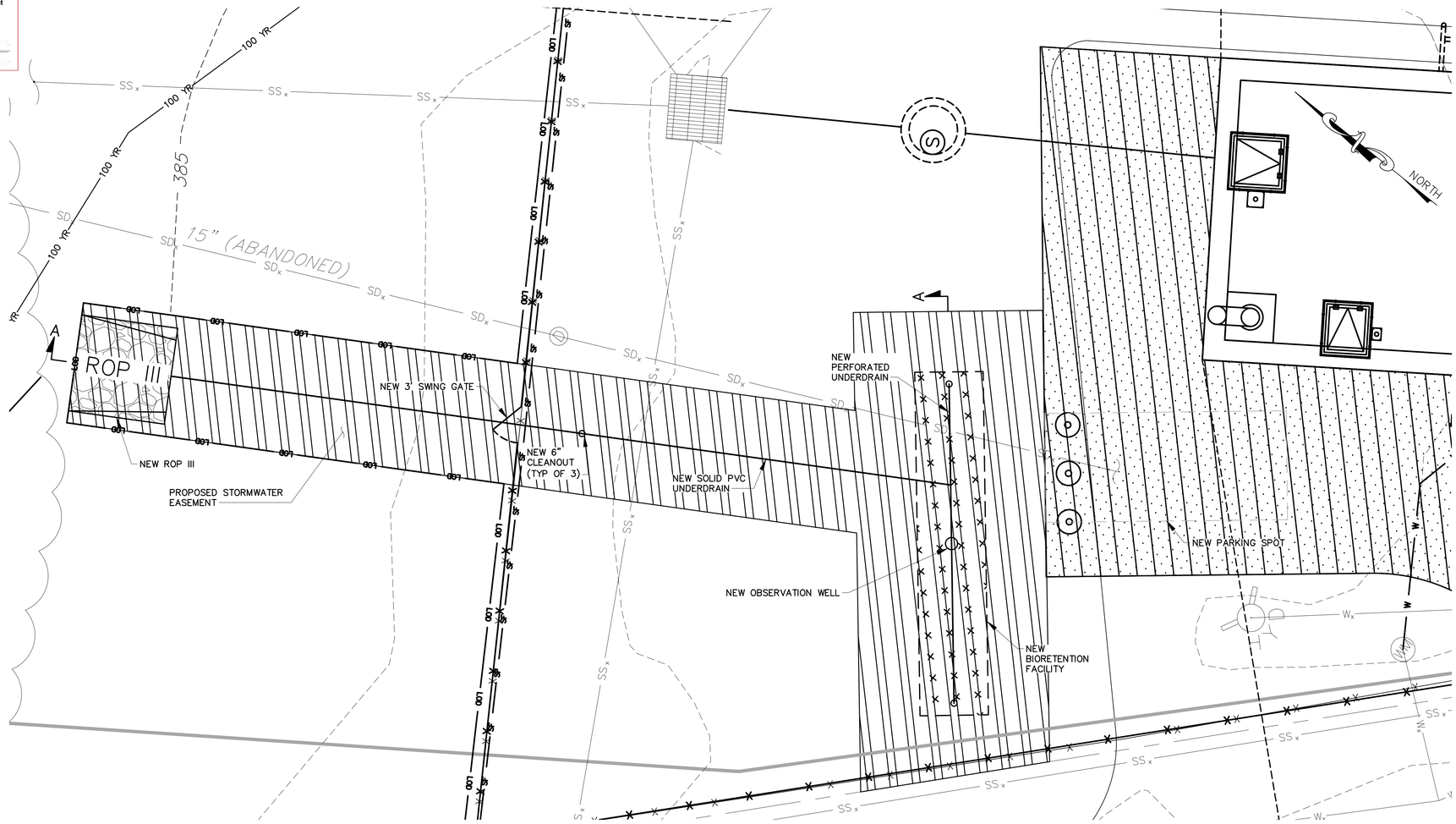

BIORETENTION PLANTING PLAN
SCALE: 1"=5'

PLANTING NOTES:

1. ALL PLANTS SELECTED ARE SPECIES NATIVE TO THE REGION.
2. ALL HERBACEOUS PLANTS SHALL BE PROPERLY IDENTIFIED BY WEATHER PROOF LABELS SECURELY AFFIXED BEFORE DELIVERY TO PROJECT SITE. LABELS SHALL NOT BE REMOVED UNTIL THE FINAL INSPECTIONS BY A FREDERICK COUNTY REPRESENTATIVE.
3. ANY REQUEST TO SUBSTITUTE PLANTS OF DIFFERENT SPECIES, CULTIVARS, SIZE, GROWTH HABIT OR PLANTING STOCK TYPE SHALL BE SUBMITTED IN WRITING TO THE FREDERICK COUNTY REPRESENTATIVE AS A SUBSTITUTION REQUEST. SUBSTITUTIONS WILL NOT BE PERMITTED WITHOUT WRITTEN APPROVAL FROM A FREDERICK COUNTY REPRESENTATIVE.
4. IF THE PLANTING IS COMPLETED OUTSIDE OF THE DESIGNATED TIME PERIOD, THEN EVALUATION AND POSSIBLE ACCEPTANCE OF THE PLANTING WILL OCCUR NO SOONER THAN ONE YEAR AFTER THE COMPLETION OF ALL PLANTING.
5. PLANTS SHALL BE WATERED 3 TIMES PER WEEK DURING THE GROWING SEASON AND 2 TIMES PER MONTH IN THE DORMANT PERIOD IN THE ABSENCE OF SUFFICIENT RAINFALL.
6. DEAD PLANTS RESULTING FROM WINTER FREEZES SHALL BE REPLACED IN THE SPRING.

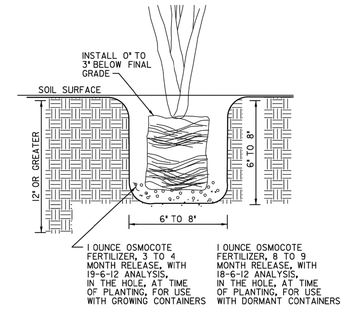

MAY BE INSTALLED YEAR ROUND
(DORMANT CONTAINER - OCTOBER THROUGH MARCH)
(GROWING CONTAINER - APRIL THROUGH SEPTEMBER)

PLANTING DETAIL
HERBACEOUS PLANT
(CONTAINER GROWN)
N.T.S.

1. Dig a hole large enough to accommodate the plant, while allowing space to backfill around it.
2. Backfill the sides of the pit with approved backfill and tamp firmly as pit is being filled.

PLANTING SCHEDULE

QUANTITY	BOTANICAL NAME	COMMON NAME	SIZE	SYMBOL	WETLAND INDICATOR STATUS
188	Asclepias Incarnata	Swamp Milkweed	1 GAL	AI	OBL

ALL DIMENSIONS AND EXISTING CONDITIONS
SHALL BE CHECKED AND VERIFIED BY THE CONTRACTOR AT THE SITE.

1"=10' 10' 5' 0 10' 20'

STATE OF MARYLAND JEFFREY SCOTT LEWIS No. 22765 PROFESSIONAL ENGINEER
01/25/2023

PROFESSIONAL CERTIFICATION
I HEREBY CERTIFY THAT THESE DOCUMENTS WERE PREPARED OR APPROVED BY ME, AND THAT I AM A DULY LICENSED PROFESSIONAL ENGINEER UNDER THE LAWS OF THE STATE OF MARYLAND.
LICENSE NO. 22765 EXPIRATION DATE 07/09/2024

RK&K
700 EAST PRATT STREET, SUITE 500
BALTIMORE, MARYLAND 21202
800.787.3755

NO.	DESCRIPTION	BY	DATE
	REVISIONS		

TOWN OF EMMITSBURG, MARYLAND
NEW CREAMERY ROAD SEWAGE PUMP STATION
EMMITSBURG, MARYLAND

STORMWATER MANAGEMENT PLAN

ENGINEER	CHECKED BY
JSG	RAL
DRAWN BY	DATE
JAB	1/2023
RK&K PROJECT NUMBER	
19082	

DRAWING NUMBER
SWM2
SHEET NO. 12 OF 60

RKK21\SYS - \\ad.rkk.com\fs\Cloud\Projects\2019\19082_CreameryPS\Cadd\Plans\Civil\19082CR-004-CP-C1-SC7.dwg Jan 27, 2023 - 8:55am Plot Scale 1:1

Division of Planning and Permitting
Department of Development
Review Engineering

APPROVED: 06/0?/22

Signature:

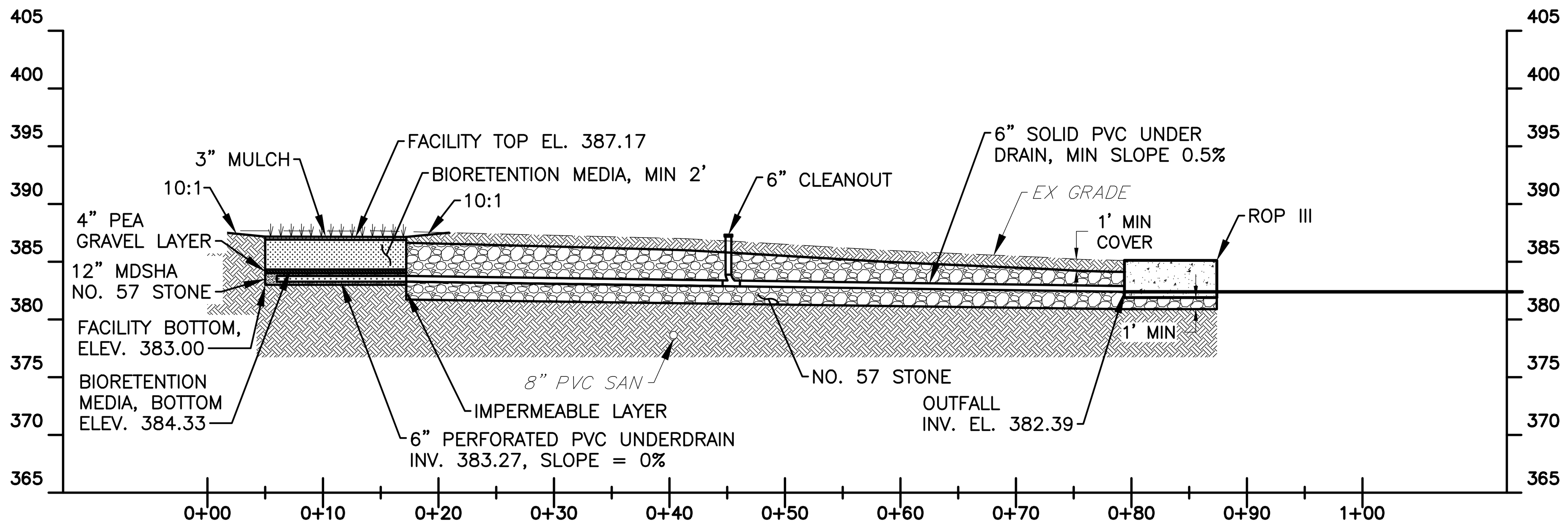

NOTE:

1. SEE DWG. SWM2, SHEET 12 OF 60.

PROFILE A–A

SCALE:
VERT: 1"=10'
HORIZ: 1"=10'

MATERIAL	ELEVATION
PONDING DEPTH	6"
TOP OF MULCH	387.17
TOP OF BIORETENTION MEDIA	386.92
TOP OF PEA GRAVEL	384.92
UNDERDRAIN BOTTOM	383.27
FACILITY BOTTOM	383.00
UNDERDRAIN OUTFALL	382.39

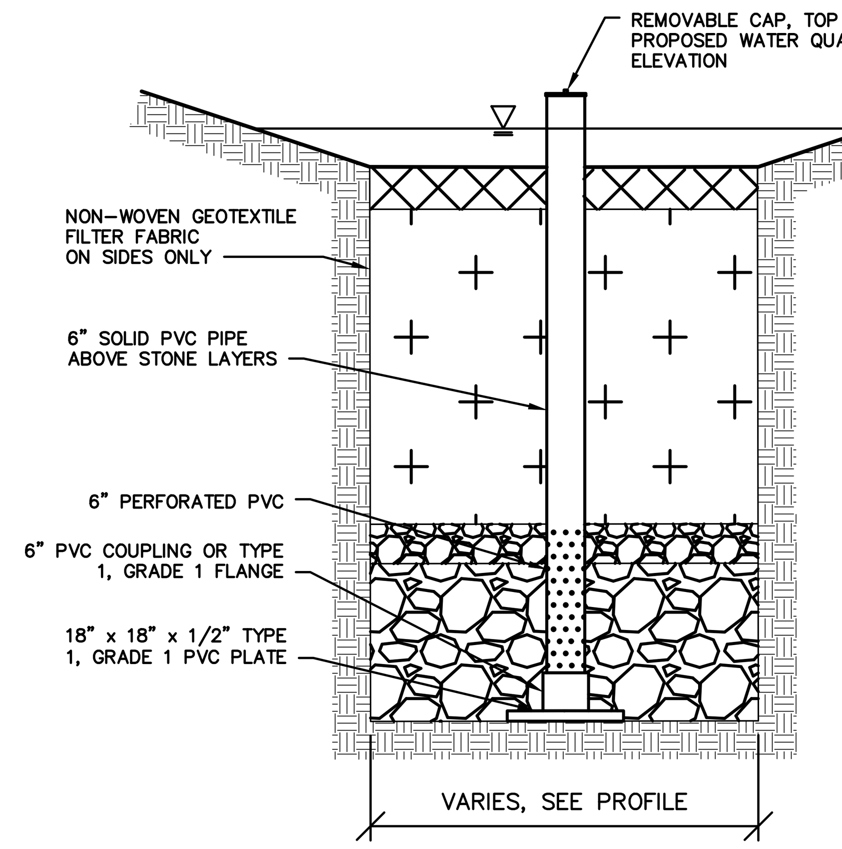

OBSERVATION WELL NOTES:
1. OBSERVATION WELLS (6" PVC SCH. 40 PIPE) SHALL BE PLACED IN THE BIORETENTION FACILITIES AT THE LOCATIONS INDICATED.
2. PERFORATIONS SHALL BE 3/8" DIA. AT 4" O/C 90 DEGREES ALL AROUND PIPE.
3. THREE 1" HOLES SHALL BE DRILLED IN BOTTOM PLATE TO ALLOW WATER TO DRAIN FROM THE OBSERVATION WELL.
4. WELLS ARE TO BE CAPPED USING A REMOVABLE WATER TIGHT PVC CAP.
5. PVC PIPE SHALL BE ATTACHED TO THE FLANGE WITH SOLVENT CEMENT PER THE MANUFACTURER'S SPECIFICATIONS.
6. PERFORATED PORTIONS OF PIPE TO BE DOUBLE WRAPPED WITH 1/4" GALVANIZED HARDWARE CLOTH.

OBSERVATION WELL DETAIL

NTS

STORMWATER MAINTENANCE SCHEDULE
MICRO-BIORETENTION

MONTHLY INSPECTION		
Inspection Item	**Inspection Requirements**	**Remedial Action**
Debris and Trash	Check for trash and debris in facility including inlets, outlets, conveyance systems, and area around facility.	Remove all trash and debris and dispose in an acceptable manner. Unclog all openings.
Plant Composition and Health	Compare plant composition with approved plans. Check for invasive species or weeds. Check for dead or dying vegetation.	Remove invasive species and weeds. Replace dead plants in accordance with approved landscaping plan.
Vegetative Cover	Check for channelizing, erosion, and bare spots. Check for vegetation blocking inlet and outlet.	Remove or cut back vegetation around inlet and outlet structures. Mow side slopes when grass exceeds 12 inches in height, but do not mow filter bed. Remove grass clippings. Re-seed or re-plant in accordance with approved landscaping plans.
Mulch Layer	Check mulch for adequate cover, sediment accumulation, or discoloration.	Replace and remove old mulch and excess sediment. Provide adequate mulch cover according to approved design.
SEASONAL INSPECTION AND AFTER A MAJOR STORM		
Inspection Item	**Inspection Requirements**	**Remedial Action**
Dewatering	Check ponding level. Surface storage must dewater within 48 hours of rainfall. Noticeable odors, stained water on the filter surface or at the outlet, or the presence of algae or aquatic vegetation are indicators of anaerobic conditions and inadequate dewatering of the facility.	Remove and replace top few inches of media. Confirm adequate dewatering with follow up inspections. If the facility does not function as intended after the above action, the entire system including the underdrain may need refurbishing.
Erosion	Check inlets, filter bed, outlets, and side slopes for erosion, rills, gullies, and runoff channelization.	Re-grading may be required when concentrated flow causes rills or gullying through the facility. Grade, vegetate, and/or armor to provide stable conveyance in accordance with approved plans.
Sediment Accumulation	Check for accumulated sediment in conveyance systems and on filter bed. Check for clogged openings.	When sediment accumulates to 1 inch depth, remove sediment. Remove sediment from clogged openings. Dispose of all sediment in an acceptable location.
Blockages	Check overflow inlet (riser), piping, and underdrain for blockages. Check observation wells for water level.	Clear out any blockages.
ANNUAL INSPECTION		
Inspection Item	**Inspection Requirements**	**Remedial Action**
Maintenance Access	Check for accessibility to facility.	Prevent excessive vegetative growth, erosion, and obstructions on access way.
Flow Conveyance System	Check overflow inlet, piping, and bypass for misalignments, breakage, and blockage.	Repair any broken or faulty piping. Clear out any blockages.
Structural Components	Check for evidence of structural deterioration, spalling, or cracking. Inlet and outlet structures as well as riprap outfalls must be in good condition.	Repair to good condition according to specifications on the approved plans.
Overall Function of Facility	Check that practice is functioning as designed.	Repair to good condition according to specifications on the approved plans.

Table B.4.1 Materials Specifications for Micro-Bioretention, Rain Gardens & Landscape Infiltration-

Material	Specification	Size	Notes
Plantings	see Appendix A, Table A.4	n/a	plantings are site-specific
Planting soil [2' to 4' deep]	loamy sand (60 - 65%) & compost (35 – 40%) or sandy loam (30%), coarse sand (30%) & compost (40%)	n/a	USDA soil types loamy sand or sandy loam; clay content < 5%
Organic content	Min. 10% by dry weight (ASTM D 2974)		
Mulch	shredded hardwood		aged 6 months, minimum; no pine or wood chips
Pea gravel diaphragm	pea gravel: ASTM-D-448	NO. 8 OR NO. 9 (1/8" TO 3/8")	
Curtain drain	ornamental stone: washed cobbles	stone: 2" to 5"	
Geotextile		n/a	PE Type 1 nonwoven
Gravel (underdrains and infiltration berms)	AASHTO M-43	NO. 57 OR NO. 6 AGGREGATE (3/8" to 3/4")	
Underdrain piping	F 758, Type PS 28 or AASHTO M-278	4" to 6" rigid schedule 40 PVC or SDR35	Slotted or perforated pipe; 3/8" perf. @ 6" on center, 4 holes per row; minimum of 3" of gravel over pipes; not necessary underneath pipes. Perforated pipe shall be wrapped with ¼-inch galvanized hardware cloth
Poured in place concrete (if required)	MSHA Mix No. 3; f'_c = 3500 psi @ 28 days, normal weight, air-entrained; reinforcing to meet ASTM-615-60	n/a	on-site testing of poured-in-place concrete required: 28 day strength and slump test; all concrete design (cast-in-place or pre-cast) *not using previously approved State or local standards* requires design drawings sealed and approved by a professional structural engineer licensed in the State of Maryland - design to include meeting ACI Code 350.R/89; vertical loading [H-10 or H-20]; allowable horizontal loading (based on soil pressures); and analysis of potential cracking
Sand	AASHTO-M-6 or ASTM-C-33	0.02" to 0.04"	Sand substitutions such as Diabase and Graystone (**AASHTO)** #10 are not acceptable. No calcium carbonated or dolomitic sand substitutions are acceptable. No "rock dust" can be used for sand.

MATERIAL SPECIFICATIONS FOR BIORETENTION

MATERIAL	SPECIFICATION	SIZE	NOTES
Plantings	See Sheet SM–02		
Bioretention Soil Mixture (BSM)	Sand (35–60%) Silt (30–55%) Clay (10–25%)		USDA soil types loamy sand, sandy loam or loam
Mulch	Shredded hardwood		Aged 6 mo. minimum; no pine or wood chips
Pea Gravel Layer	ASTM–D–448	No. 8 or No. 9 (1/8" to 3/8")	To be placed between gravel jacket and BSM
Gravel Layer	ASSHTO M–43	MDSHA No. 57 stone	To be placed on bottom of facility
Impermeable Liner	30–mm polyethylene impermeable liner		To be placed on all sides and entire bottom of facility
Underdrains and Pipe Fittings	AASHTO M–278	6" perforated and nonperforated schedule 40 pvc	Perforated sections should contain perforations 3/8 " diameter, 6" on center, 4 holes per row
Cleanouts (Observation Wells)		6" nonperforated schedule 40 pvc	Cleanouts/observation wells shall extend 6" above the top elevation of the bioretention facility
Non–Woven Geotextile (ROPIII)	See Sheet SC–03 Table H–1		To be installed in accordance with Detail D–4–1–C on Sheet SC–04
Rip–Rap (ROPIII)		Class III Rip–Rap	To be installed in accordance with Detail D–4–1–C on Sheet SC–04

ALL DIMENSIONS AND EXISTING CONDITIONS
SHALL BE CHECKED AND VERIFIED BY THE CONTRACTOR AT THE SITE.

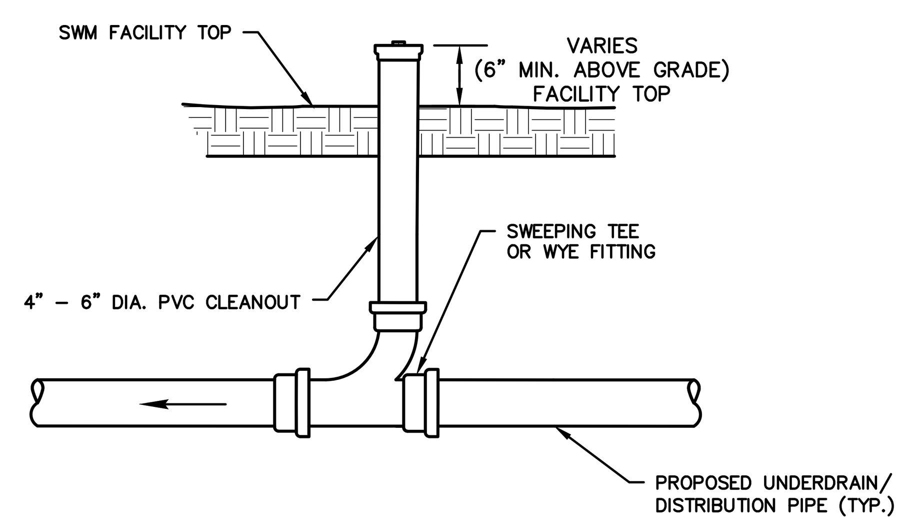

NOTES:

1. PVC WYE JOINT FOR INLINE SECTION OR 45° BEND FOR END SECTION.
2. CONCRETE COLLAR TO BE POURED SINGULARLY IN SOIL / GRASS OR MONOLITHICALLY WITH SOIL SURROUNDING CONCRETE. THE CONCRETE COLLAR MUST HAVE STONE FOOTING. EXPANSION JOINT OR CAULK MAY BE USED.
3. MATERIAL SURROUNDING CLEANOUT RISER MUST BE COMPACTED TO ENSURE NO LATERAL MOVEMENT PRIOR TO PLACEMENT OF CONCRETE COLLAR.
4. PLACE THREE (3) LENGTHS OF REBAR EVENLY SPACED AROUND COLLAR, AND 3" FROM OUTER EDGE.
5. CLEANOUT COVERS SHALL BE STAMPED "CO" OR "STORM".
6. ANY REQUIRED REDUCING COUPLINGS OR HUBS SHALL BE CONNECTED TO THE STANDPIPE. REDUCING FITTINGS SHALL NOT BE USED IN THE DIRECTION OF FLOW.

TYPICAL CLEANOUT DETAIL

NTS

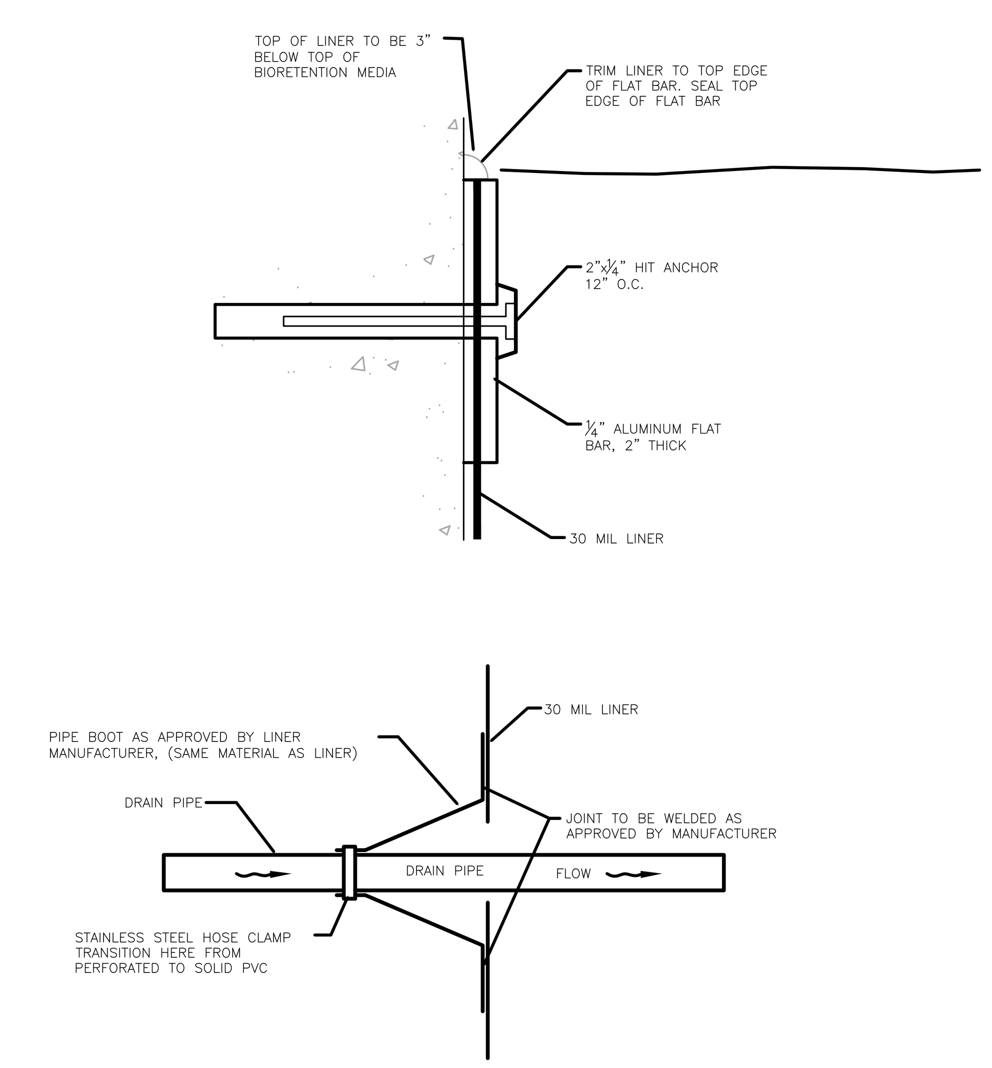

IMPERMEABLE LINER DETAIL

NTS

1"=10' 10' 5' 0 10' 20'

PROFESSIONAL CERTIFICATION

I HEREBY CERTIFY THAT THESE DOCUMENTS WERE PREPARED OR APPROVED BY ME, AND THAT I AM A DULY LICENSED PROFESSIONAL ENGINEER UNDER THE LAWS OF THE STATE OF MARYLAND. LICENSE NO. 22765 EXPIRATION DATE 07/09/2024

01/25/2023

RK&K
700 EAST PRATT STREET, SUITE 500
BALTIMORE, MARYLAND 21202
800.787.3755

NO.	DESCRIPTION	BY	DATE

REVISIONS

TOWN OF EMMITSBURG, MARYLAND
NEW CREAMERY ROAD SEWAGE PUMP STATION
EMMITSBURG, MARYLAND

STORMWATER MANAGEMENT PLAN

ENGINEER	CHECKED BY
JSG	RAL
DRAWN BY	DATE
JAB	1/2023
RK&K PROJECT NUMBER	
19082	

DRAWING NUMBER
SWM3

RKK21\SYS – \\ad.rkk.com\fs\Cloud\Projects\2019\19082_CreameryPS\Cadd\Plans\Civil\19082CR-004-CP-C1-SC7.dwg Jan 27, 2023 – 8:55am Plot Scale 1:1

Division of Planning and Permitting
Department of Development
Review Engineering

APPROVED: 06/08/22

Signature:

SOIL EROSION AND SEDIMENT CONTROL NOTES:

1. REFER TO "2011 MARYLAND STANDARDS AND SPECIFICATIONS FOR SOIL EROSION AND SEDIMENT CONTROL" FOR STANDARD DETAILS AND DETAILED SPECIFICATIONS OF EACH PRACTICE SPECIFIED HEREIN.
2. WITH THE APPROVAL OF THE SEDIMENT CONTROL INSPECTOR, MINOR FIELD ADJUSTMENTS CAN AND WILL BE MADE TO INSURE THE CONTROL OF ANY SEDIMENT. CHANGES IN SEDIMENT CONTROL PRACTICES REQUIRE PRIOR APPROVAL OF THE SEDIMENT CONTROL INSPECTOR AND THE CATOCTIN & FREDERICK SOIL CONSERVATION DISTRICTS.
3. AT THE END OF EACH WORKING DAY, ALL SEDIMENT CONTROL PRACTICES WILL BE INSPECTED AND LEFT IN OPERATIONAL CONDITION.
4. FOLLOWING INITIAL SOIL DISTURBANCE OR RE-DISTURBANCE, PERMANENT OR TEMPORARY STABILIZATION MUST BE COMPLETED WITHIN: A.) THREE (3) CALENDAR DAYS AS TO THE SURFACE OF ALL PERIMETER CONTROLS, DIKES, SWALES, DITCHES, PERIMETER SLOPES, AND ALL SLOPES STEEPER THAN THREE HORIZONTAL TO ONE VERTICAL (3:1), AND B.) SEVEN (7) CALENDAR DAYS AS TO ALL OTHER DISTURBED OR GRADED AREAS ON THE PROJECT SITE NOT UNDER ACTIVE GRADING.
5. ANY CHANGE TO THE GRADING PROPOSED ON THIS PLAN REQUIRES RE-SUBMISSION TO CATOCTIN & FREDERICK SOIL CONSERVATION DISTRICTS FOR APPROVAL.
6. DUST CONTROL WILL BE PROVIDED FOR ALL DISTURBED AREAS. REFER TO "2011 MARYLAND STANDARDS AND SPECIFICATIONS FOR SOIL EROSION AND SEDIMENT CONTROL", PG H.22, FOR ACCEPTABLE METHODS AND SPECIFICATIONS FOR DUST CONTROL.
7. ANY VARIATIONS FROM THE SEQUENCE OF OPERATIONS STATED ON THIS PLAN REQUIRES THE APPROVAL OF THE SEDIMENT CONTROL INSPECTOR AND THE CATOCTIN & FREDERICK SOIL CONSERVATION DISTRICTS PRIOR TO THE INITIATION OF THE CHANGE.
8. EXCESS CUT OR BORROW MATERIAL SHALL GO TO, OR COME FROM, RESPECTIVELY, A SITE WITH AN OPEN GRADING PERMIT AND APPROVED SEDIMENT AND CONTROL PLAN.
9. THE FOLLOWING ITEM MAY BE USED AS APPLICABLE: REFER TO "MARYLAND'S GUIDELINES TO WATERWAY CONSTRUCTION" BY THE WATER MANAGEMENT ADMINISTRATION OF THE MARYLAND DEPARTMENT OF THE ENVIRONMENT, REVISED NOVEMBER 2000, FOR STANDARD DETAILS AND DETAILED SPECIFICATIONS OF EACH PRACTICE SPECIFIED HEREIN FOR WATERWAY CONSTRUCTION.
10. PUMPING SEDIMENT-LADEN WATER INTO WATERS OF THE STATE IS STRICTLY PROHIBITED. ANY PORTABLE DEWATERING DEVICE MUST BE LOCATED WITHIN THE LIMIT OF DISTURBANCE.
11. NOTHING HEREIN RELIEVES THE CONTRACTOR FROM COMPLYING WITH ANY AND ALL OTHER FEDERAL, STATE OR MUNICIPAL REGULATIONS.
12. NO PUMPING FROM FOUNDATION EXCAVATIONS WILL BE ALLOWED DIRECTLY INTO THE TOWN'S SYSTEM UNLESS IT IS FILTERED BY WAY OF SEDIMENT TRAPS OR DEWATERING DEVICE.
13. ALL EXCAVATION MATERIAL SHALL BE PLACED ON THE HIGH SIDE WHENEVER POSSIBLE AND CONFINED TO AN AREA WHERE IT WILL NOT OBSTRUCT THE NORMAL FLOW OF DRAINAGE COURSES.
14. CONTINUOUS INSPECTION AND MAINTENANCE OF ALL SEDIMENT CONTROL DEVICES WILL BE REQUIRED.
15. THE CONTRACTOR SHALL NOT DEVIATE FROM THE APPROVED SEDIMENT AND EROSION CONTROL PLANS WITHOUT PRIOR APPROVAL OF THE CATOCTIN & FREDERICK SOIL CONSERVATION DISTRICTS. VARIATIONS TO THE PLAN MUST BE SUBMITTED IN WRITING, ACCOMPANIED BY A COPY OF THE ORIGINALLY APPROVED PLAN MODIFIED TO SHOW THE REQUESTED CHANGES, FOR THIS APPROVAL. SUBSTANTIAL CHANGES WILL NECESSITATE AMENDING THE BUILDING AND/OR GRADING PERMIT IF APPLICABLE.

UTILITY NOTES:

1. CONTRACTOR SHOULD OPEN ONLY THAT SECTION OF TRENCH THAT CAN BE BACKFILLED AND STABILIZED EACH DAY. IF TRENCH MUST REMAIN OPEN LONGER THAN ONE DAY, SILT FENCE SHALL BE PLACED BELOW (DOWNSLOPE OF) THE TRENCH.
2. PLACE ALL EXCAVATED MATERIAL ON UPHILL SIDE OF TRENCH.
3. ANY SEDIMENT CONTROLS DISTURBED BY UTILITY CONSTRUCTION ARE TO BE REPAIRED IMMEDIATELY.

SECTION I – CERTIFICATIONS:

A. OWNER'S/DEVELOPER'S CERTIFICATION:

"I/WE HEREBY CERTIFY THAT ANY CLEARING, GRADING, CONSTRUCTION AND/OR DEVELOPMENT WILL BE DONE PURSUANT TO THIS PLAN AND THAT ANY RESPONSIBLE PERSONNEL INVOLVED IN THIS CONSTRUCTION PROJECT WILL HAVE A CERTIFICATE OF ATTENDANCE AT A MARYLAND DEPARTMENT OF ENVIRONMENT APPROVED TRAINING PROGRAM FOR THE CONTROL OF SEDIMENT AND EROSION BEFORE BEGINNING THE PROJECT. I/WE ALSO CERTIFY THAT THE SITE WILL BE INSPECTED AT THE END OF EACH WORKING DAY, AND THAT ANY NEEDED MAINTENANCE WILL BE COMPLETED SO AS TO INSURE THAT ALL SEDIMENT CONTROL PRACTICES ARE LEFT IN OPERATIONAL CONDITION. I/WE AUTHORIZE THE RIGHT OF ENTRY FOR PERIODIC ON-SITE EVALUATION BY THE CATOCTIN & FREDERICK SOIL CONSERVATION DISTRICTS BOARD OF SUPERVISORS OR THEIR AUTHORIZED AGENTS."

SIGNATURE OF OWNER/DEVELOPER — DATE: 3/7/22

PRINT NAME: Donald N. Briggs — TITLE: Town Mayor

B. CONSULTANT'S CERTIFICATION:

"I CERTIFY THAT THIS PLAN OF EROSION AND SEDIMENT CONTROL REPRESENTS A PRACTICAL AND WORKABLE PLAN BASED ON MY PERSONAL KNOWLEDGE OF THE SITE, AND THIS PLAN WAS PREPARED IN ACCORDANCE WITH THE REQUIREMENTS OF THE CATOCTIN & FREDERICK SOIL CONSERVATION DISTRICTS AND THE CURRENT STATE OF MARYLAND SPECIFICATIONS FOR SOIL EROSION AND SEDIMENT CONTROL. I HAVE REVIEWED THIS EROSION AND SEDIMENT CONTROL PLAN WITH THE OWNER/DEVELOPER."

SIGNATURE — DATE: 4/15/22

PRINT NAME: JEFFREY S. GROW, PE — MD LICENSE NUMBER: 22765

B-4-2 STANDARDS AND SPECIFICATIONS FOR SOIL PREPARATION, TOPSOILING, AND SOIL AMENDMENTS

DEFINITION

THE PROCESS OF PREPARING THE SOILS TO SUSTAIN ADEQUATE VEGETATIVE STABILIZATION.

PURPOSE

TO PROVIDE A SUITABLE SOIL MEDIUM FOR VEGETATIVE GROWTH.

CONDITIONS WHERE PRACTICE APPLIES

WHERE VEGETATIVE STABILIZATION IS TO BE ESTABLISHED.

CRITERIA

A. SOIL PREPARATION

1. TEMPORARY STABILIZATION
   a. SEEDBED PREPARATION CONSISTS OF LOOSENING SOIL TO A DEPTH OF 3 TO 5 INCHES BY MEANS OF SUITABLE AGRICULTURAL OR CONSTRUCTION EQUIPMENT, SUCH AS DISC HARROWS OR CHISEL PLOWS OR RIPPERS MOUNTED ON CONSTRUCTION EQUIPMENT. AFTER THE SOIL IS LOOSENED, IT MUST NOT BE ROLLED OR DRAGGED SMOOTH BUT LEFT IN THE ROUGHENED CONDITION. SLOPES 3:1 OR FLATTER ARE TO BE TRACKED WITH RIDGES RUNNING PARALLEL TO THE CONTOUR OF THE SLOPE.
   b. APPLY FERTILIZER AND LIME AS PRESCRIBED ON THE PLANS.
   c. INCORPORATE LIME AND FERTILIZER INTO THE TOP 3 TO 5 INCHES OF SOIL BY DISKING OR OTHER SUITABLE MEANS.
2. PERMANENT STABILIZATION
   a. A SOIL TEST IS REQUIRED FOR ANY EARTH DISTURBANCE OF 5 ACRES OR MORE. THE MINIMUM SOIL CONDITIONS REQUIRED FOR PERMANENT VEGETATIVE ESTABLISHMENT ARE:
      I. SOIL PH BETWEEN 6.0 AND 7.0.
      II. SOLUBLE SALTS LESS THAN 500 PARTS PER MILLION (PPM).
      III. SOIL CONTAINS LESS THAN 40 PERCENT CLAY BUT ENOUGH FINE GRAINED MATERIAL (GREATER THAN 30 PERCENT SILT PLUS CLAY) TO PROVIDE THE CAPACITY TO HOLD A MODERATE AMOUNT OF MOISTURE. AN EXCEPTION: IF LOVEGRASS WILL BE PLANTED, THEN A SANDY SOIL (LESS THAN 30 PERCENT SILT PLUS CLAY) WOULD BE ACCEPTABLE.
      IV. SOIL CONTAINS 1.5 PERCENT MINIMUM ORGANIC MATTER BY WEIGHT.
      V. SOIL CONTAINS SUFFICIENT PORE SPACE TO PERMIT ADEQUATE ROOT PENETRATION.
   b. APPLICATION OF AMENDMENTS OR TOPSOIL IS REQUIRED IF ON-SITE SOILS DO NOT MEET THE ABOVE CONDITIONS.
   c. GRADED AREAS MUST BE MAINTAINED IN A TRUE AND EVEN GRADE AS SPECIFIED ON THE APPROVED PLAN, THEN SCARIFIED OR OTHERWISE LOOSENED TO A DEPTH OF 3 TO 5 INCHES.
   d. APPLY SOIL AMENDMENTS AS SPECIFIED ON THE APPROVED PLAN OR AS INDICATED BY THE RESULTS OF A SOIL TEST.
   e. MIX SOIL AMENDMENTS INTO THE TOP 3 TO 5 INCHES OF SOIL BY DISKING OR OTHER SUITABLE MEANS. RAKE LAWN AREAS TO SMOOTH THE SURFACE, REMOVE LARGE OBJECTS LIKE STONES AND BRANCHES, AND READY THE AREA FOR SEED APPLICATION. LOOSEN SURFACE SOIL BY DRAGGING WITH A HEAVY CHAIN OR OTHER EQUIPMENT TO ROUGHEN THE SURFACE WHERE SITE CONDITIONS WILL NOT PERMIT NORMAL SEEDBED PREPARATION. TRACK SLOPES 3:1 OR FLATTER WITH TRACKED EQUIPMENT LEAVING THE SOIL IN AN IRREGULAR CONDITION WITH RIDGES RUNNING PARALLEL TO THE CONTOUR OF THE SLOPE. LEAVE THE TOP 1 TO 3 INCHES OF SOIL LOOSE AND FRIABLE. SEEDBED LOOSENING MAY BE UNNECESSARY ON NEWLY DISTURBED AREAS.

B. TOPSOILING

1. TOPSOIL IS PLACED OVER PREPARED SUBSOIL PRIOR TO ESTABLISHMENT OF PERMANENT VEGETATION. THE PURPOSE IS TO PROVIDE A SUITABLE SOIL MEDIUM FOR VEGETATIVE GROWTH. SOILS OF CONCERN HAVE LOW MOISTURE CONTENT, LOW NUTRIENT LEVELS, LOW PH, MATERIALS TOXIC TO PLANTS, AND/OR UNACCEPTABLE SOIL GRADATION.
2. TOPSOIL SALVAGED FROM AN EXISTING SITE MAY BE USED PROVIDED IT MEETS THE STANDARDS AS SET FORTH IN THESE SPECIFICATIONS. TYPICALLY, THE DEPTH OF TOPSOIL TO BE SALVAGED FOR A GIVEN SOIL TYPE CAN BE FOUND IN THE REPRESENTATIVE SOIL PROFILE SECTION IN THE SOIL SURVEY PUBLISHED BY USDA-NRCS.
3. TOPSOILING IS LIMITED TO AREAS HAVING 2:1 OR FLATTER SLOPES WHERE:
   a. THE TEXTURE OF THE EXPOSED SUBSOIL/PARENT MATERIAL IS NOT ADEQUATE TO PRODUCE VEGETATIVE GROWTH.
   b. THE SOIL MATERIAL IS SO SHALLOW THAT THE ROOTING ZONE IS NOT DEEP ENOUGH TO SUPPORT PLANTS OR FURNISH CONTINUING SUPPLIES OF MOISTURE AND PLANT NUTRIENTS.
   c. THE ORIGINAL SOIL TO BE VEGETATED CONTAINS MATERIAL TOXIC TO PLANT GROWTH.
   d. THE SOIL IS SO ACIDIC THAT TREATMENT WITH LIMESTONE IS NOT FEASIBLE.
4. AREAS HAVING SLOPES STEEPER THAN 2:1 REQUIRE SPECIAL CONSIDERATION AND DESIGN.
5. TOPSOIL SPECIFICATIONS: SOIL TO BE USED AS TOPSOIL MUST MEET THE FOLLOWING CRITERIA:
   a. TOPSOIL MUST BE A LOAM, SANDY LOAM, CLAY LOAM, SILT LOAM, SANDY CLAY LOAM, OR LOAMY SAND. OTHER SOILS MAY BE USED IF RECOMMENDED BY AN AGRONOMIST OR SOIL SCIENTIST AND APPROVED BY THE APPROPRIATE APPROVAL AUTHORITY. TOPSOIL MUST NOT BE A MIXTURE OF CONTRASTING TEXTURED SUBSOILS AND MUST CONTAIN LESS THAN 5 PERCENT BY VOLUME OF CINDERS, STONES, SLAG, COARSE FRAGMENTS, GRAVEL, STICKS, ROOTS, TRASH, OR OTHER MATERIALS LARGER THAN 1½ INCHES IN DIAMETER.
   b. TOPSOIL MUST BE FREE OF NOXIOUS PLANTS OR PLANT PARTS SUCH AS BERMUDA GRASS, QUACK GRASS, JOHNSON GRASS, NUT SEDGE, POISON IVY, THISTLE, OR OTHERS AS SPECIFIED.
   c. TOPSOIL SUBSTITUTES OR AMENDMENTS, AS RECOMMENDED BY A QUALIFIED AGRONOMIST OR SOIL SCIENTIST AND APPROVED BY THE APPROPRIATE APPROVAL AUTHORITY, MAY BE USED IN LIEU OF NATURAL TOPSOIL.
6. TOPSOIL APPLICATION
   a. EROSION AND SEDIMENT CONTROL PRACTICES MUST BE MAINTAINED WHEN APPLYING TOPSOIL.
   b. UNIFORMLY DISTRIBUTE TOPSOIL IN A 5 TO 8 INCH LAYER AND LIGHTLY COMPACT TO A MINIMUM THICKNESS OF 4 INCHES. SPREADING IS TO BE PERFORMED IN SUCH A MANNER THAT SODDING OR SEEDING CAN PROCEED WITH A MINIMUM OF ADDITIONAL SOIL PREPARATION AND TILLAGE. ANY IRREGULARITIES IN THE SURFACE RESULTING FROM TOPSOILING OR OTHER OPERATIONS MUST BE CORRECTED IN ORDER TO PREVENT THE FORMATION OF DEPRESSIONS OR WATER POCKETS.
   c. TOPSOIL MUST NOT BE PLACED IF THE TOPSOIL OR SUBSOIL IS IN A FROZEN OR MUDDY CONDITION, WHEN THE SUBSOIL IS EXCESSIVELY WET OR IN A CONDITION THAT MAY OTHERWISE BE DETRIMENTAL TO PROPER GRADING AND SEEDBED PREPARATION.

C. SOIL AMENDMENTS (FERTILIZER AND LIME SPECIFICATIONS)

1. SOIL TESTS MUST BE PERFORMED TO DETERMINE THE EXACT RATIOS AND APPLICATION RATES FOR BOTH LIME AND FERTILIZER ON SITES HAVING DISTURBED AREAS OF 5 ACRES OR MORE. SOIL ANALYSIS MAY BE PERFORMED BY A RECOGNIZED PRIVATE OR COMMERCIAL LABORATORY. SOIL SAMPLES TAKEN FOR ENGINEERING PURPOSES MAY ALSO BE USED FOR CHEMICAL ANALYSES.
2. FERTILIZERS MUST BE UNIFORM IN COMPOSITION, FREE FLOWING AND SUITABLE FOR ACCURATE APPLICATION BY APPROPRIATE EQUIPMENT. MANURE MAY BE SUBSTITUTED FOR FERTILIZER WITH PRIOR APPROVAL FROM THE APPROPRIATE APPROVAL AUTHORITY. FERTILIZERS MUST ALL BE DELIVERED TO THE SITE FULLY LABELED ACCORDING TO THE APPLICABLE LAWS AND MUST BEAR THE NAME, TRADE NAME OR TRADEMARK AND WARRANTY OF THE PRODUCER.
3. LIME MATERIALS MUST BE GROUND LIMESTONE (HYDRATED OR BURNT LIME MAY BE SUBSTITUTED EXCEPT WHEN HYDROSEEDING) WHICH CONTAINS AT LEAST 50 PERCENT TOTAL OXIDES (CALCIUM OXIDE PLUS MAGNESIUM OXIDE). LIMESTONE MUST BE GROUND TO SUCH FINENESS THAT AT LEAST 50 PERCENT WILL PASS THROUGH A #100 MESH SIEVE AND 98 TO 100 PERCENT WILL PASS THROUGH A #20 MESH SIEVE.
4. LIME AND FERTILIZER ARE TO BE EVENLY DISTRIBUTED AND INCORPORATED INTO THE TOP 3 TO 5 INCHES OF SOIL BY DISKING OR OTHER SUITABLE MEANS.
5. WHERE THE SUBSOIL IS EITHER HIGHLY ACIDIC OR COMPOSED OF HEAVY CLAYS, SPREAD GROUND LIMESTONE AT THE RATE OF 4 TO 8 TONS/ACRE (200-400 POUNDS PER 1,000 SQUARE FEET) PRIOR TO THE PLACEMENT OF TOPSOIL.

B-4-3 STANDARDS AND SPECIFICATIONS FOR SEEDING AND MULCHING

DEFINITION

THE APPLICATION OF SEED AND MULCH TO ESTABLISH VEGETATIVE COVER.

PURPOSE

TO PROTECT DISTURBED SOILS FROM EROSION DURING AND AT THE END OF CONSTRUCTION.

CONDITIONS WHERE PRACTICE APPLIES

TO THE SURFACE OF ALL PERIMETER CONTROLS, SLOPES, AND ANY DISTURBED AREA NOT UNDER ACTIVE GRADING.

CRITERIA

A. SEEDING

1. SPECIFICATIONS
   a. ALL SEED MUST MEET THE REQUIREMENTS OF THE MARYLAND STATE SEED LAW. ALL SEED MUST BE SUBJECT TO RE-TESTING BY A RECOGNIZED SEED LABORATORY. ALL SEED USED MUST HAVE BEEN TESTED WITHIN THE 6 MONTHS IMMEDIATELY PRECEDING THE DATE OF SOWING SUCH MATERIAL ON ANY PROJECT. REFER TO TABLE B.4 REGARDING THE QUALITY OF SEED. SEED TAGS MUST BE AVAILABLE UPON REQUEST TO THE INSPECTOR TO VERIFY TYPE OF SEED AND SEEDING RATE.
   b. MULCH ALONE MAY BE APPLIED BETWEEN THE FALL AND SPRING SEEDING DATES ONLY IF THE GROUND IS FROZEN. THE APPROPRIATE SEEDING MIXTURE MUST BE APPLIED WHEN THE GROUND THAWS.
   c. INOCULANTS: THE INOCULANT FOR TREATING LEGUME SEED IN THE SEED MIXTURES MUST BE A PURE CULTURE OF NITROGEN FIXING BACTERIA PREPARED SPECIFICALLY FOR THE SPECIES. INOCULANTS MUST NOT BE USED LATER THAN THE DATE INDICATED ON THE CONTAINER. ADD FRESH INOCULANTS AS DIRECTED ON THE PACKAGE. USE FOUR TIMES THE RECOMMENDED RATE WHEN HYDROSEEDING. NOTE: IT IS VERY IMPORTANT TO KEEP INOCULANT AS COOL AS POSSIBLE UNTIL USED. TEMPERATURES ABOVE 75 TO 80 DEGREES FAHRENHEIT CAN WEAKEN BACTERIA AND MAKE THE INOCULANT LESS EFFECTIVE.
   d. SOD OR SEED MUST NOT BE PLACED ON SOIL WHICH HAS BEEN TREATED WITH SOIL STERILANTS OR CHEMICALS USED FOR WEED CONTROL UNTIL SUFFICIENT TIME HAS ELAPSED (14 DAYS MIN.) TO PERMIT DISSIPATION OF PHYTO-TOXIC MATERIALS.
2. APPLICATION
   a. DRY SEEDING: THIS INCLUDES USE OF CONVENTIONAL DROP OR BROADCAST SPREADERS.
      I. INCORPORATE SEED INTO THE SUBSOIL AT THE RATES PRESCRIBED ON TEMPORARY SEEDING TABLE B.1, PERMANENT SEEDING TABLE B.3, OR SITE-SPECIFIC SEEDING SUMMARIES.
      II. APPLY SEED IN TWO DIRECTIONS, PERPENDICULAR TO EACH OTHER. APPLY HALF THE SEEDING RATE IN EACH DIRECTION. ROLL THE SEEDED AREA WITH A WEIGHTED ROLLER TO PROVIDE GOOD SEED TO SOIL CONTACT.
   b. DRILL OR CULTIPACKER SEEDING: MECHANIZED SEEDERS THAT APPLY AND COVER SEED WITH SOIL.
      I. CULTIPACKING SEEDERS ARE REQUIRED TO BURY THE SEED IN SUCH A FASHION AS TO PROVIDE AT LEAST 1/4 INCH OF SOIL COVERING. SEEDBED MUST BE FIRM AFTER PLANTING.
      II. APPLY SEED IN TWO DIRECTIONS, PERPENDICULAR TO EACH OTHER. APPLY HALF THE SEEDING RATE IN EACH DIRECTION
   c. HYDROSEEDING: APPLY SEED UNIFORMLY WITH HYDROSEEDER (SLURRY INCLUDES SEED AND FERTILIZER).
      I. IF FERTILIZER IS BEING APPLIED AT THE TIME OF SEEDING, THE APPLICATION RATES SHOULD NOT EXCEED THE FOLLOWING: NITROGEN, 100 POUNDS PER ACRE TOTAL OF SOLUBLE NITROGEN; P205 (PHOSPHOROUS), 200 POUNDS PER ACRE; K20 (POTASSIUM), 200 POUNDS PER ACRE.
      II. LIME: USE ONLY GROUND AGRICULTURAL LIMESTONE (UP TO 3 TONS PER ACRE MAY BE APPLIED BY HYDROSEEDING). NORMALLY, NOT MORE THAN 2 TONS ARE APPLIED BY HYDROSEEDING AT ANY ONE TIME. DO NOT USE BURNT OR HYDRATED LIME WHEN HYDROSEEDING.
      III. MIX SEED AND FERTILIZER ON SITE AND SEED IMMEDIATELY AND WITHOUT INTERRUPTION.
      IV. WHEN HYDROSEEDING DO NOT INCORPORATE SEED INTO THE SOIL.

B. MULCHING

1. MULCH MATERIALS (IN ORDER OF PREFERENCE)
   a. STRAW CONSISTING OF THOROUGHLY THRESHED WHEAT, RYE, OAT, OR BARLEY AND REASONABLY BRIGHT IN COLOR. STRAW IS TO BE FREE OF NOXIOUS WEED SEEDS AS SPECIFIED IN THE MARYLAND SEED LAW AND NOT MUSTY, MOLDY, CAKED, DECAYED, OR EXCESSIVELY DUSTY. NOTE: USE ONLY STERILE STRAW MULCH IN AREAS WHERE ONE SPECIES OF GRASS IS DESIRED.
   b. WOOD CELLULOSE FIBER MULCH (WCFM) CONSISTING OF SPECIALLY PREPARED WOOD CELLULOSE PROCESSED INTO A UNIFORM FIBROUS PHYSICAL STATE.
      I. WCFM IS TO BE DYED GREEN OR CONTAIN A GREEN DYE IN THE PACKAGE THAT WILL PROVIDE AN APPROPRIATE COLOR TO FACILITATE VISUAL INSPECTION OF THE UNIFORMLY SPREAD SLURRY.
      II. WCFM, INCLUDING DYE, MUST CONTAIN NO GERMINATION OR GROWTH INHIBITING FACTORS.
      III. WCFM MATERIALS ARE TO BE MANUFACTURED AND PROCESSED IN SUCH A MANNER THAT THE WOOD CELLULOSE FIBER MULCH WILL REMAIN IN UNIFORM SUSPENSION IN WATER UNDER AGITATION AND WILL BLEND WITH SEED, FERTILIZER AND OTHER ADDITIVES TO FORM A HOMOGENEOUS SLURRY. THE MULCH MATERIAL MUST FORM A BLOTTER-LIKE GROUND COVER, ON APPLICATION, HAVING MOISTURE ABSORPTION AND PERCOLATION PROPERTIES AND MUST COVER AND HOLD GRASS SEED IN CONTACT WITH THE SOIL WITHOUT INHIBITING THE GROWTH OF THE GRASS SEEDLINGS.
      IV. WCFM MATERIAL MUST NOT CONTAIN ELEMENTS OR COMPOUNDS AT CONCENTRATION LEVELS THAT WILL BE PHYTO-TOXIC.
      V. WCFM MUST CONFORM TO THE FOLLOWING PHYSICAL REQUIREMENTS: FIBER LENGTH OF APPROXIMATELY 10 MILLIMETERS, DIAMETER APPROXIMATELY 1 MILLIMETER, PH RANGE OF 4.0 TO 8.5, ASH CONTENT OF 1.6 PERCENT MAXIMUM AND WATER HOLDING CAPACITY OF 90 PERCENT MINIMUM.
2. APPLICATION
   a. APPLY MULCH TO ALL SEEDED AREAS IMMEDIATELY AFTER SEEDING.
   b. WHEN STRAW MULCH IS USED, SPREAD IT OVER ALL SEEDED AREAS AT THE RATE OF 2 TONS PER ACRE TO A UNIFORM LOOSE DEPTH OF 1 TO 2 INCHES. APPLY MULCH TO ACHIEVE A UNIFORM DISTRIBUTION AND DEPTH SO THAT THE SOIL SURFACE IS NOT EXPOSED. WHEN USING A MULCH ANCHORING TOOL, INCREASE THE APPLICATION RATE TO 2.5 TONS PER ACRE.
   c. WOOD CELLULOSE FIBER USED AS MULCH MUST BE APPLIED AT A NET DRY WEIGHT OF 1500 POUNDS PER ACRE. MIX THE WOOD CELLULOSE FIBER WITH WATER TO ATTAIN A MIXTURE WITH A MAXIMUM OF 50 POUNDS OF WOOD CELLULOSE FIBER PER 100 GALLONS OF WATER.
3. ANCHORING
   a. PERFORM MULCH ANCHORING IMMEDIATELY FOLLOWING APPLICATION OF MULCH TO MINIMIZE LOSS BY WIND OR WATER. THIS MAY BE DONE BY ONE OF THE FOLLOWING METHODS (LISTED BY PREFERENCE), DEPENDING UPON THE SIZE OF THE AREA AND EROSION HAZARD:
      I. A MULCH ANCHORING TOOL IS A TRACTOR DRAWN IMPLEMENT DESIGNED TO PUNCH AND ANCHOR MULCH INTO THE SOIL SURFACE A MINIMUM OF 2 INCHES. THIS PRACTICE IS MOST EFFECTIVE ON LARGE AREAS, BUT IS LIMITED TO FLATTER SLOPES WHERE EQUIPMENT CAN OPERATE SAFELY. IF USED ON SLOPING LAND, THIS PRACTICE SHOULD FOLLOW THE CONTOUR.
      II. WOOD CELLULOSE FIBER MAY BE USED FOR ANCHORING STRAW. APPLY THE FIBER BINDER AT A NET DRY WEIGHT OF 750 POUNDS PER ACRE. MIX THE WOOD CELLULOSE FIBER WITH WATER AT A MAXIMUM OF 50 POUNDS OF WOOD CELLULOSE FIBER PER 100 GALLONS OF WATER.
      III. SYNTHETIC BINDERS SUCH AS ACRYLIC DLR (AGRO-TACK), DCA-70, PETROSET, TERRA TAX II, TERRA TACK AR OR OTHER APPROVED EQUAL MAY BE USED. FOLLOW APPLICATION RATES AS SPECIFIED BY THE MANUFACTURER. APPLICATION OF LIQUID BINDERS NEEDS TO BE HEAVIER AT THE EDGES WHERE WIND CATCHES MULCH, SUCH AS IN VALLEYS AND ON CRESTS OF BANKS. USE OF ASPHALT BINDERS IS STRICTLY PROHIBITED.
      IV. LIGHTWEIGHT PLASTIC NETTING MAY BE STAPLED OVER THE MULCH ACCORDING TO MANUFACTURER RECOMMENDATIONS. NETTING IS USUALLY AVAILABLE IN ROLLS 4 TO 15 FEET WIDE AND 300 TO 3,000 FEET LONG.

ALL DIMENSIONS AND EXISTING CONDITIONS
SHALL BE CHECKED AND VERIFIED BY THE CONTRACTOR AT THE SITE.

DH.

FREDERICK SOIL CONSERVATION DISTRICT
SOIL EROSION AND SEDIMENT CONTROL PLAN APPROVAL

BY: Steve Leatherman

DATE: 5-13-22

SCD APPROVAL FOR SEDIMENT AND EROSION CONTROL IS CONTINGENT UPON ISSUANCE OF ALL APPLICABLE REGULATORY PERMITS.

STATE OF MARYLAND — JEFFREY SCOTT GROW — No. 22765 — PROFESSIONAL ENGINEER — 01/25/2023

PROFESSIONAL CERTIFICATION

I HEREBY CERTIFY THAT THESE DOCUMENTS WERE PREPARED OR APPROVED BY ME, AND THAT I AM A DULY LICENSED PROFESSIONAL ENGINEER UNDER THE LAWS OF THE STATE OF MARYLAND.
LICENSE NO. 22765 EXPIRATION DATE 07/09/2024

RK&K
700 EAST PRATT STREET, SUITE 500
BALTIMORE, MARYLAND 21202
800.787.3755

NO.	DESCRIPTION	BY	DATE

REVISIONS

TOWN OF EMMITSBURG, MARYLAND
NEW CREAMERY ROAD SEWAGE PUMP STATION
EMMITSBURG, MARYLAND

GRADING AND SEDIMENT CONTROL NOTES

ENGINEER	CHECKED BY
JSG	RAL
DRAWN BY	DATE
JAB	1/2023
RK&K PROJECT NUMBER	
19082	

DRAWING NUMBER
SC1

RKK21\SYS – \\ad.rkk.com\fs\Cloud\Projects\2019\19082_CreameryPS\Cadd\Plans\Civil\19082CR-014-CP-SC1.dwg Jan 27, 2023 – 8:48am Plot Scale 1:1

Division of Planning and Permitting
Department of Development
Review Engineering

APPROVED: 06/08/22

Signature:

B-4-4 STANDARDS AND SPECIFICATIONS FOR TEMPORARY STABILIZATION

DEFINITION

TO STABILIZE DISTURBED SOILS WITH VEGETATION FOR UP TO 6 MONTHS.

PURPOSE

TO USE FAST GROWING VEGETATION THAT PROVIDES COVER ON DISTURBED SOILS.

CONDITIONS WHERE PRACTICE APPLIES

EXPOSED SOILS WHERE GROUND COVER IS NEEDED FOR A PERIOD OF 6 MONTHS OR LESS. FOR LONGER DURATION OF TIME, PERMANENT STABILIZATION PRACTICES ARE REQUIRED.

CRITERIA

1. SELECT ONE OR MORE OF THE SPECIES OR SEED MIXTURES LISTED IN TABLE B.1 FOR THE APPROPRIATE PLANT HARDINESS ZONE (FROM FIGURE B.3), AND ENTER THEM IN THE TEMPORARY SEEDING SUMMARY BELOW ALONG WITH APPLICATION RATES, SEEDING DATES AND SEEDING DEPTHS. IF THIS SUMMARY IS NOT PUT ON THE PLAN AND COMPLETED, THEN TABLE B.1 PLUS FERTILIZER AND LIME RATES MUST BE PUT ON THE PLAN.
2. FOR SITES HAVING SOIL TESTS PERFORMED, USE AND SHOW THE RECOMMENDED RATES BY THE TESTING AGENCY. SOIL TESTS ARE NOT REQUIRED FOR TEMPORARY SEEDING.
3. WHEN STABILIZATION IS REQUIRED OUTSIDE OF A SEEDING SEASON, APPLY SEED AND MULCH OR STRAW MULCH ALONE AS PRESCRIBED IN SECTION B-4-3.A.1.B AND MAINTAIN UNTIL THE NEXT SEEDING SEASON.

TEMPORARY SEEDING SUMMARY

HARDINESS ZONE: 7A SEEDING MIXTURE TABLE B.1					FERTILIZER RATE (10-20-20)	LIME RATE
NO.	SPECIES	APPLICATION RATE (LB/AC)	SEEDING DATES	SEEDING DEPTHS		
	BARLEY (HORDEUM VULGARE)	96	FEB 15 TO APR 30; AUG 15 TO NOV 30	1.0"	436 LB/AC (10 LB/1,000 SF)	2 TONS/AC (90 LB/1,000 SF)
	CEREAL RYE (SECALE CEREALE)	112	FEB 15 TO APR 30; AUG 15 TO DEC 15	1.0"		
	FOXTAIL MILLET (SETARIA ITALICA)	30	MAY 1 TO AUG 14	0.5"		

NOTES:

1. SEEDING RATES FOR THE WARM-SEASON GRASSES ARE IN POUNDS OF PURE LIVE SEED (PLS). ACTUAL PLANTING RATES SHALL BE ADJUSTED TO REFLECT PERCENT SEED GERMINATION AND PURITY, AS TESTED. ADJUSTMENTS ARE USUALLY NOT NEEDED FOR THE COOL-SEASON GRASSES.

   SEEDING RATES LISTED ABOVE ARE FOR TEMPORARY SEEDINGS, WHEN PLANTED ALONE. WHEN PLANTED AS A NURSE CROP WITH PERMANENT SEED MIXES, USE 1/3 OF THE SEEDING RATE LISTED ABOVE FOR BARLEY, OATS, AND WHEAT. FOR SMALLER-SEEDED GRASSES (ANNUAL RYEGRASS, PEARL MILLET, FOXTAIL MILLET), DO NOT EXCEED MORE THAN 5% (BY WEIGHT) OF THE OVERALL PERMANENT SEEDING MIX. CEREAL RYE GENERALLY SHOULD NOT BE USED AS A NURSE CROP, UNLESS PLANTING WILL OCCUR IN VERY LATE FALL BEYOND THE SEEDING DATES FOR OTHER TEMPORARY SEEDINGS. CEREAL RYE HAS ALLELOPATHIC PROPERTIES THAT INHIBIT THE GERMINATION AND GROWTH OF OTHER PLANTS. IF IT MUST BE USED AS A NURSE CROP, SEED AT 1/3 OF THE RATE LISTED ABOVE.

   OATS ARE THE RECOMMENDED NURSE CROP FOR WARM-SEASON GRASSES.

2. FOR SANDY SOILS, PLANT SEEDS AT TWICE THE DEPTH LISTED ABOVE.
3. THE PLANTING DATES LISTED ARE AVERAGES FOR EACH ZONE AND MAY REQUIRE ADJUSTMENT TO REFLECT LOCAL CONDITIONS, ESPECIALLY NEAR THE BOUNDARIES OF THE ZONE.

FREDERICK SOIL CONSERVATION DISTRICT
SOIL EROSION AND SEDIMENT CONTROL PLAN APPROVAL

BY: _____

DATE: 5-10-22

SCD APPROVAL FOR SEDIMENT AND EROSION CONTROL IS CONTINGENT UPON ISSUANCE OF ALL APPLICABLE REGULATORY PERMITS.

ALL DIMENSIONS AND EXISTING CONDITIONS SHALL BE CHECKED AND VERIFIED BY THE CONTRACTOR AT THE SITE.

B-4-5 STANDARDS AND SPECIFICATIONS FOR PERMANENT STABILIZATION

DEFINITION

TO STABILIZE DISTURBED SOILS WITH PERMANENT VEGETATION.

PURPOSE

TO USE LONG-LIVED PERENNIAL GRASSES AND LEGUMES TO ESTABLISH PERMANENT GROUND COVER ON DISTURBED SOILS.

CONDITIONS WHERE PRACTICE APPLIES

EXPOSED SOILS WHERE GROUND COVER IS NEEDED FOR 6 MONTHS OR MORE.

CRITERIA

A. SEED MIXTURES

1. GENERAL USE

   a. SELECT ONE OR MORE OF THE SPECIES OR MIXTURES LISTED IN TABLE B.3 FOR THE APPROPRIATE PLANT HARDINESS ZONE (FROM FIGURE B.3) AND BASED ON THE SITE CONDITION OR PURPOSE FOUND ON TABLE B.2. ENTER SELECTED MIXTURE(S), APPLICATION RATES, AND SEEDING DATES IN THE PERMANENT SEEDING SUMMARY. THE SUMMARY IS TO BE PLACED ON THE PLAN.

   b. ADDITIONAL PLANTING SPECIFICATIONS FOR EXCEPTIONAL SITES SUCH AS SHORELINES, STREAM BANKS, OR DUNES OR FOR SPECIAL PURPOSES SUCH AS WILDLIFE OR AESTHETIC TREATMENT MAY BE FOUND IN USDA-NRCS TECHNICAL FIELD OFFICE GUIDE, SECTION 342 – CRITICAL AREA PLANTING.

   c. FOR SITES HAVING DISTURBED AREA OVER 5 ACRES, USE AND SHOW THE RATES RECOMMENDED BY THE SOIL TESTING AGENCY.

   d. FOR AREAS RECEIVING LOW MAINTENANCE, APPLY UREA FORM FERTILIZER (46-0-0) AT 3½ POUNDS PER 1000 SQUARE FEET (150 POUNDS PER ACRE) AT THE TIME OF SEEDING IN ADDITION TO THE SOIL AMENDMENTS SHOWN IN THE PERMANENT SEEDING SUMMARY .

2. TURFGRASS MIXTURES

   a. AREAS WHERE TURFGRASS MAY BE DESIRED INCLUDE LAWNS, PARKS, PLAYGROUNDS, AND COMMERCIAL SITES WHICH WILL RECEIVE A MEDIUM TO HIGH LEVEL OF MAINTENANCE.

   b. SELECT ONE OR MORE OF THE SPECIES OR MIXTURES LISTED BELOW BASED ON THE SITE CONDITIONS OR PURPOSE. ENTER SELECTED MIXTURE(S), APPLICATION RATES, AND SEEDING DATES IN THE PERMANENT SEEDING SUMMARY. THE SUMMARY IS TO BE PLACED ON THE PLAN.

I. KENTUCKY BLUEGRASS: FULL SUN MIXTURE: FOR USE IN AREAS THAT RECEIVE INTENSIVE MANAGEMENT. IRRIGATION REQUIRED IN THE AREAS OF CENTRAL MARYLAND AND EASTERN SHORE. RECOMMENDED CERTIFIED KENTUCKY BLUEGRASS CULTIVARS SEEDING RATE: 1.5 TO 2.0 POUNDS PER 1000 SQUARE FEET. CHOOSE A MINIMUM OF THREE KENTUCKY BLUEGRASS CULTIVARS WITH EACH RANGING FROM 10 TO 35 PERCENT OF THE TOTAL MIXTURE BY WEIGHT.

II. KENTUCKY BLUEGRASS/PERENNIAL RYE: FULL SUN MIXTURE: FOR USE IN FULL SUN AREAS WHERE RAPID ESTABLISHMENT IS NECESSARY AND WHEN TURF WILL RECEIVE MEDIUM TO INTENSIVE MANAGEMENT. CERTIFIED PERENNIAL RYEGRASS CULTIVARS/CERTIFIED KENTUCKY BLUEGRASS SEEDING RATE: 2 POUNDS MIXTURE PER 1000 SQUARE FEET. CHOOSE A MINIMUM OF THREE KENTUCKY BLUEGRASS CULTIVARS WITH EACH RANGING FROM 10 TO 35 PERCENT OF THE TOTAL MIXTURE BY WEIGHT.

III. TALL FESCUE/KENTUCKY BLUEGRASS: FULL SUN MIXTURE: FOR USE IN DROUGHT PRONE AREAS AND/OR FOR AREAS RECEIVING LOW TO MEDIUM MANAGEMENT IN FULL SUN TO MEDIUM SHADE. RECOMMENDED MIXTURE INCLUDES; CERTIFIED TALL FESCUE CULTIVARS 95 TO 100 PERCENT, CERTIFIED KENTUCKY BLUEGRASS CULTIVARS 0 TO 5 PERCENT. SEEDING RATE: 5 TO 8 POUNDS PER 1000 SQUARE FEET. ONE OR MORE CULTIVARS MAY BE BLENDED.

IV. KENTUCKY BLUEGRASS/FINE FESCUE: SHADE MIXTURE: FOR USE IN AREAS WITH SHADE IN BLUEGRASS LAWNS. FOR ESTABLISHMENT IN HIGH QUALITY, INTENSIVELY MANAGED TURF AREA. MIXTURE INCLUDES; CERTIFIED KENTUCKY BLUEGRASS CULTIVARS 30 TO 40 PERCENT AND CERTIFIED FINE FESCUE AND 60 TO 70 PERCENT. SEEDING RATE: 1½ TO 3 POUNDS PER 1000 SQUARE FEET.

NOTES:

SELECT TURFGRASS VARIETIES FROM THOSE LISTED IN THE MOST CURRENT UNIVERSITY OF MARYLAND PUBLICATION, AGRONOMY MEMO #77,
"TURFGRASS CULTIVAR RECOMMENDATIONS FOR MARYLAND"

CHOOSE CERTIFIED MATERIAL. CERTIFIED MATERIAL IS THE BEST GUARANTEE OF CULTIVAR PURITY. THE CERTIFICATION PROGRAM OF THE
MARYLAND DEPARTMENT OF AGRICULTURE, TURF AND SEED SECTION, PROVIDES A RELIABLE MEANS OF CONSUMER PROTECTION AND ASSURES A PURE GENETIC LINE

c. IDEAL TIMES OF SEEDING FOR TURF GRASS MIXTURES

WESTERN MD: MARCH 15 TO JUNE 1, AUGUST 1 TO OCTOBER 1 (HARDINESS ZONES: 5B, 6A)
CENTRAL MD: MARCH 1 TO MAY 15, AUGUST 15 TO OCTOBER 15 (HARDINESS ZONE: 6B)
SOUTHERN MD, EASTERN SHORE: MARCH 1 TO MAY 15, AUGUST 15 TO OCTOBER 15 (HARDINESS ZONES: 7A, 7B)

d. TILL AREAS TO RECEIVE SEED BY DISKING OR OTHER APPROVED METHODS TO A DEPTH OF 2 TO 4 INCHES, LEVEL AND RAKE THE AREAS TO PREPARE A PROPER SEEDBED. REMOVE STONES AND DEBRIS OVER 1½ INCHES IN DIAMETER. THE RESULTING SEEDBED MUST BE IN SUCH CONDITION THAT FUTURE MOWING OF GRASSES WILL POSE NO DIFFICULTY.

e. IF SOIL MOISTURE IS DEFICIENT, SUPPLY NEW SEEDINGS WITH ADEQUATE WATER FOR PLANT GROWTH (½ TO 1 INCH EVERY 3 TO 4 DAYS DEPENDING ON SOIL TEXTURE) UNTIL THEY ARE FIRMLY ESTABLISHED. THIS IS ESPECIALLY TRUE WHEN SEEDINGS ARE MADE LATE IN THE PLANTING SEASON, IN ABNORMALLY DRY OR HOT SEASONS, OR ON ADVERSE SITES.

PERMANENT SEEDING SUMMARY

HARDINESS ZONE: 7A SEEDING MIXTURE TABLE B.3					FERTILIZER RATE (10-20-20)			LIME RATE
NO.	SPECIES	APPLICATION RATE (LB/AC)	* SEEDING DATES	SEEDING DEPTHS	N	P_2O_5	K_2O	
9	TALL FESCUE (LOLIUM ARUNDINACEUM)	60	2/15-4/30 8/15-10/31	¼-½ IN	45 LB/AC (1.0 LB/1,000 SF)	90 LB/AC (2 LB/1,000 SF)	90 LB/AC (2 LB/1,000 SF)	2 TONS/AC (90 LB/1,000 SF)
	KENTUCKY BLUEGRASS (POA PRATENSIS)	40						
	PERENNIAL RYEGRASS (LOLIUM PERENNE)	20						

* FOR SEEDING DATES 5/1-8/14, PLEASE ADD 6.0 LBS PER ACRE OF FOXTAIL MILLET TO SEED MIXTURE NO. 9.

B: SOD: TO PROVIDE QUICK COVER ON DISTURBED AREAS (2:1 GRADE OR FLATTER).

1. GENERAL SPECIFICATIONS

   a. CLASS OF TURFGRASS SOD MUST BE MARYLAND STATE CERTIFIED. SOD LABELS MUST BE MADE AVAILABLE TO THE JOB FOREMAN AND INSPECTOR.

   b. SOD MUST BE MACHINE CUT AT A UNIFORM SOIL THICKNESS OF ¾ INCH, PLUS OR MINUS ¼ INCH, AT THE TIME OF CUTTING. MEASUREMENT FOR THICKNESS MUST EXCLUDE TOP GROWTH AND THATCH. BROKEN PADS AND TORN OR UNEVEN ENDS WILL NOT BE ACCEPTABLE.

   c. STANDARD SIZE SECTIONS OF SOD MUST BE STRONG ENOUGH TO SUPPORT THEIR OWN WEIGHT AND RETAIN THEIR SIZE AND SHAPE WHEN SUSPENDED VERTICALLY WITH A FIRM GRASP ON THE UPPER 10 PERCENT OF THE SECTION.

   d. SOD MUST NOT BE HARVESTED OR TRANSPLANTED WHEN MOISTURE CONTENT (EXCESSIVELY DRY OR WET) MAY ADVERSELY AFFECT ITS SURVIVAL.

   e. SOD MUST BE HARVESTED, DELIVERED, AND INSTALLED WITHIN A PERIOD OF 36 HOURS. SOD NOT TRANSPLANTED WITHIN THIS PERIOD MUST BE APPROVED BY AN AGRONOMIST OR SOIL SCIENTIST PRIOR TO ITS INSTALLATION.

2. SOD INSTALLATION

   a. DURING PERIODS OF EXCESSIVELY HIGH TEMPERATURE OR IN AREAS HAVING DRY SUBSOIL, LIGHTLY IRRIGATE THE SUBSOIL IMMEDIATELY PRIOR TO LAYING THE SOD.

   b. LAY THE FIRST ROW OF SOD IN A STRAIGHT LINE WITH SUBSEQUENT ROWS PLACED PARALLEL TO IT AND TIGHTLY WEDGED AGAINST EACH OTHER. STAGGER LATERAL JOINTS TO PROMOTE MORE UNIFORM GROWTH AND STRENGTH. ENSURE THAT SOD IS NOT STRETCHED OR OVERLAPPED AND THAT ALL JOINTS ARE BUTTED TIGHT IN ORDER TO PREVENT VOIDS WHICH WOULD CAUSE AIR DRYING OF THE ROOTS.

   c. WHEREVER POSSIBLE, LAY SOD WITH THE LONG EDGES PARALLEL TO THE CONTOUR AND WITH STAGGERING JOINTS. ROLL AND TAMP, PEG OR OTHERWISE SECURE THE SOD TO PREVENT SLIPPAGE ON SLOPES. ENSURE SOLID CONTACT EXISTS BETWEEN SOD ROOTS AND THE UNDERLYING SOIL SURFACE.

   d. WATER THE SOD IMMEDIATELY FOLLOWING ROLLING AND TAMPING UNTIL THE UNDERSIDE OF THE NEW SOD PAD AND SOIL SURFACE BELOW THE SOD ARE THOROUGHLY WET. COMPLETE THE OPERATIONS OF LAYING, TAMPING AND IRRIGATING FOR ANY PIECE OF SOD WITHIN EIGHT HOURS.

3. SOD MAINTENANCE

   a. IN THE ABSENCE OF ADEQUATE RAINFALL, WATER DAILY DURING THE FIRST WEEK OR AS OFTEN AND SUFFICIENTLY AS NECESSARY TO MAINTAIN MOIST SOIL TO A DEPTH OF 4 INCHES. WATER SOD DURING THE HEAT OF THE DAY TO PREVENT WILTING.

   b. AFTER THE FIRST WEEK, SOD WATERING IS REQUIRED AS NECESSARY TO MAINTAIN ADEQUATE MOISTURE CONTENT.

   c. DO NOT MOW UNTIL THE SOD IS FIRMLY ROOTED. NO MORE THAN ⅓ OF THE GRASS LEAF MUST BE REMOVED BY THE INITIAL CUTTING OR SUBSEQUENT CUTTINGS. MAINTAIN A GRASS HEIGHT OF AT LEAST 3 INCHES UNLESS OTHERWISE SPECIFIED.

SEDIMENT CONTROL/STORM WATER MANAGEMENT REQUIRED INSPECTIONS

YOU MUST NOTIFY THE SEDIMENT CONTROL AND STORMWATER MANAGEMENT OFFICE AT 301-694-1679 BEFORE 9:00 AM – 24 HOURS PRIOR TO THE REQUIRED INSPECTION. FAILURE TO NOTIFY THIS OFFICE WILL RESULT IN A STOP WORK ORDER OR OTHER PENALTIES AS OUTLINED IN FREDERICK COUNTY CODES.

*********NOTICE*********

THIS LIST IS FOR SEQUENCE OF CONSTRUCTION ONLY. THIS OFFICE ASSUMES NO RESPONSIBILITY OR LIABILITY FOR IMPROPER INSTALLATION OF ANY ITEMS ON THIS CHECKLIST, THIS OFFICE RECOMMENDS THAT A PROFESSIONAL ENGINEER BE PRESENT FOR EACH OF THE REQUIRED INSPECTIONS.

TYPE OF INSPECTION	MISC. COMMENTS/INITIALS
1. PRECONSTRUCTION MEETING	
2. COMPLETION OF SEDIMENT CONTROL MEASURE (IF USING BASIN SEE #6 BELOW)	_____
3. PRIOR TO MODIFICATION OR REMOVAL OF SED CONTROL.	_____
4. INFILTRATION SYSTEMS A. SITE READINESS PER SEQUENCE OF CONSTRUCTION B. INFILTRATION AREA. PROTECTED FROM SEDIMENTATION C. DIMENSIONS D. FILTRATING MATERIAL E. FILL MATERIAL F. SIZE, PLACEMENT, TYPE OF PIPING G. OBSERVATION WELL H. COVER/STABILIZATION	_____ _____ _____ _____ _____ _____ _____ _____
5. OPEN CHANNEL FLOW ATTENUATION A. SITE READINESS PER SEQUENCE OF CONSTRUCTION B. CROSS SECTION CONFORMANCE C. MATERIAL (TYPE/SIZE) D. STABILIZATION	_____ _____ _____ _____
6. RETENTION/DETENTION STRUCTURES (BASIN/PONDS) A. SUBGRADE PREPARATION 1. CORE TRENCH 2. SUITABLE MATERIAL/COMPACTION B. EMBANKMENT CONSTRUCTION 1. SUITABLE MATERIAL/COMPACTION 2. SLOPE GRADE 3. DIMENSIONS C. BARREL AND RISER ASSEMBLY 1. CORRECT MATERIAL ONSITE 2. SIZING 3. ANTI-SEEP COLLARS 4. ANTI-FLOTATION DEVICE 5. CONCRETE CRADLE (RCP ONLY) 6. INSTALLATION/BACKFILL/COMPACTION D. CONCRETE STRUCTURES 1. FOOTER DIMENSIONS 2. REINFORCING MATERIAL (SIZE, TYPE, PLACEMENT) 3. WEIR POUR/MATERIAL/SLUMP TEST 4. FORM STRIP AND FINISHING E. IMPOUNDING AREA 1. LOW FLOW CHANNELS/STABILIZATION 2. DEWATERING DEVICE 3. EMERGENCY SPILLWAY 4. EXTENDED DETENTION DEVICE F. OUTFALL AREA (LEVEL SPREADER RIPRAP CHANNEL ETC... G. VEGETATIVE STABILIZATION H. MISCELLANEOUS	_____ _____ _____ _____ _____ _____ _____ _

Division of Planning and Permitting
Department of Development
Review Engineering

APPROVED: 06/08/22

Signature:

DETAIL E-3 SUPER SILT FENCE

STANDARD SYMBOL: SSF

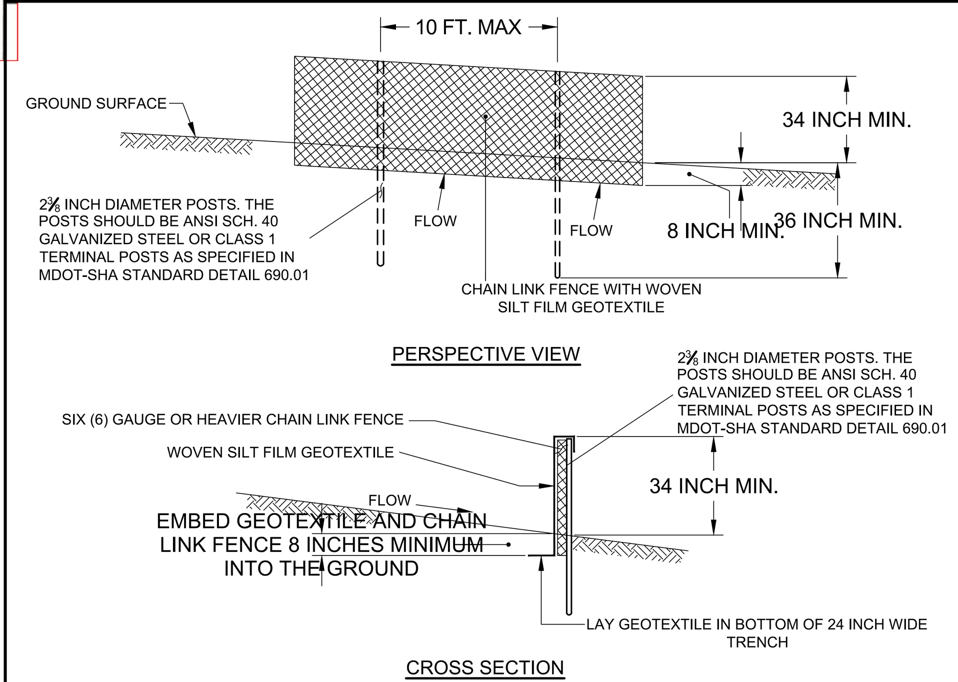

CONSTRUCTION SPECIFICATIONS

1. INSTALL 2⅜ INCH DIAMETER GALVANIZED STEEL POSTS OF 0.095 INCH WALL THICKNESS AND SIX FOOT LENGTH SPACED NO FURTHER THAN 10 FEET APART. DRIVE THE POSTS A MINIMUM OF 36 INCHES INTO THE GROUND.
2. FASTEN 6 GAUGE OR HEAVIER GALVANIZED CHAIN LINK FENCE (2⅜ INCH MAXIMUM OPENING) 42 INCHES IN HEIGHT SECURELY TO THE FENCE POSTS WITH WIRE TIES OR HUG RINGS.
3. FASTEN WOVEN SLIT FILM GEOTEXTILE AS SPECIFIED IN SECTION H-1 MATERIALS, SECURELY TO THE UPSLOPE SIDE OF THE CHAIN LINK FENCE WITH TIES SPACED EVERY 24 INCHES AT THE TOP AND MID SECTION. EMBED GEOTEXTILE AND CHAIN LINK FENCE A MINIMUM OF 8 INCHES INTO THE GROUND. LAY THE GEOTEXTILE IN THE BOTTOM OF THE 24 INCH WIDE TRENCH.
4. WHERE ENDS OF THE GEOTEXTILE COME TOGETHER, THE ENDS SHALL BE OVERLAPPED BY 6 INCHES, FOLDED, AND STAPLED TO PREVENT SEDIMENT BY PASS.
5. EXTEND BOTH ENDS OF THE SUPER SILT FENCE UPHILL A MINIMUM OF 3 VERTICAL FEET TO PREVENT RUNOFF FROM GOING AROUND THE ENDS OF THE SUPER SILT FENCE.
6. PROVIDE MANUFACTURERS CERTIFICATION TO THE INSPECTION/ENFORCEMENT AUTHORITY SHOWING THAT THE GEOTEXTILE USED MEETS THE REQUIREMENTS IN SECTION H-1 MATERIALS.
7. REMOVE ACCUMULATED SEDIMENT AND DEBRIS WHEN BULGES DEVELOP IN FENCE OR WHEN SEDIMENT REACHES 25% OF FENCE HEIGHT. REPLACE GEOTEXTILE IF TORN. IF UNDERMINING OCCURS, REINSTALL CHAIN LINK FENCING AND GEOTEXTILE.

MARYLAND STANDARDS AND SPECIFICATIONS FOR SOIL EROSION AND SEDIMENT CONTROL
MODIFIED FOR USE IN BALTIMORE COUNTY

U.S. DEPARTMENT OF AGRICULTURE NATURAL RESOURCES CONSERVATION SERVICE | MODIFIED – 2012 | MARYLAND DEPARTMENT OF THE ENVIRONMENT WATER MANAGEMENT ADMINISTRATION

DETAIL F-2 SUMP PIT

STANDARD SYMBOL: SP

**THIS MEASURE SHALL BE LOCATED WHERE IT WILL BE EASILY ACCESSIBLE TO ALLOW FOR PRACTICAL USAGE. CHANGES TO THE DISCHARGE LOCATION SHOWN ON THE APPROVED PLANS SHALL BE COORDINATED WITH THE SEDIMENT CONTROL INSPECTOR

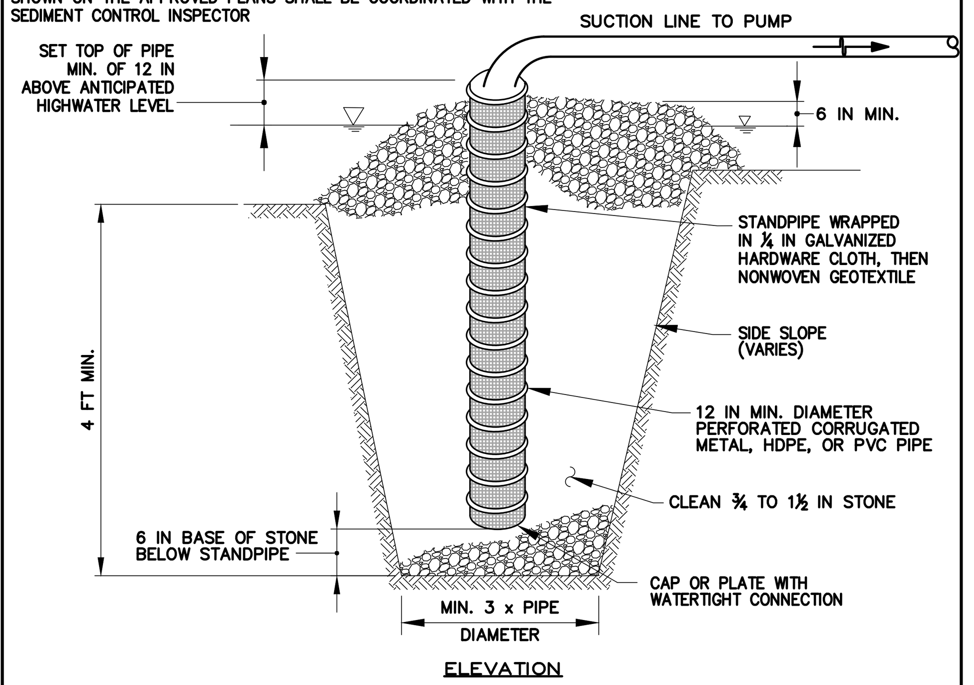

CONSTRUCTION SPECIFICATIONS

1. USE 12 INCH OR LARGER DIAMETER CORRUGATED METAL, HDPE, OR PVC PIPE WITH 1 INCH DIAMETER PERFORATIONS, 6 INCHES ON CENTER. BOTTOM OF PIPE MUST BE CAPPED WITH WATERTIGHT SEAL.
2. WRAP PIPE WITH ¼ INCH GALVANIZED HARDWARE CLOTH AND WRAP NONWOVEN GEOTEXTILE, AS SPECIFIED IN SECTION H-1 MATERIALS, OVER THE HARDWARE CLOTH.
3. EXCAVATE PIT TO THREE TIMES THE PIPE DIAMETER AND FOUR FEET IN DEPTH. PLACE ¾ TO 1½ INCH STONE OR EQUIVALENT RECYCLED CONCRETE, 6 INCHES IN DEPTH PRIOR TO PIPE PLACEMENT.
4. SET TOP OF PIPE MINIMUM 12 INCHES ABOVE ANTICIPATED WATER SURFACE ELEVATION.
5. BACKFILL PIT AROUND THE PIPE WITH ¾ TO 1½ INCH CLEAN STONE OR EQUIVALENT RECYCLED CONCRETE AND EXTEND STONE A MINIMUM OF 6 INCHES ABOVE ANTICIPATED WATER SURFACE ELEVATION.
6. DISCHARGE TO A STABLE AREA AT A NONEROSIVE RATE.
7. A SUMP PIT REQUIRES FREQUENT MAINTENANCE. IF SYSTEM CLOGS, REMOVE PERFORATED PIPE AND REPLACE GEOTEXTILE AND STONE. KEEP POINT OF DISCHARGE FREE OF EROSION.

MARYLAND STANDARDS AND SPECIFICATIONS FOR SOIL EROSION AND SEDIMENT CONTROL
MODIFIED FOR USE IN BALTIMORE COUNTY

U.S. DEPARTMENT OF AGRICULTURE NATURAL RESOURCES CONSERVATION SERVICE | MODIFIED – 2012 | MARYLAND DEPARTMENT OF THE ENVIRONMENT WATER MANAGEMENT ADMINISTRATION

DETAIL F-3 PORTABLE SEDIMENT TANK

STANDARD SYMBOL: PST

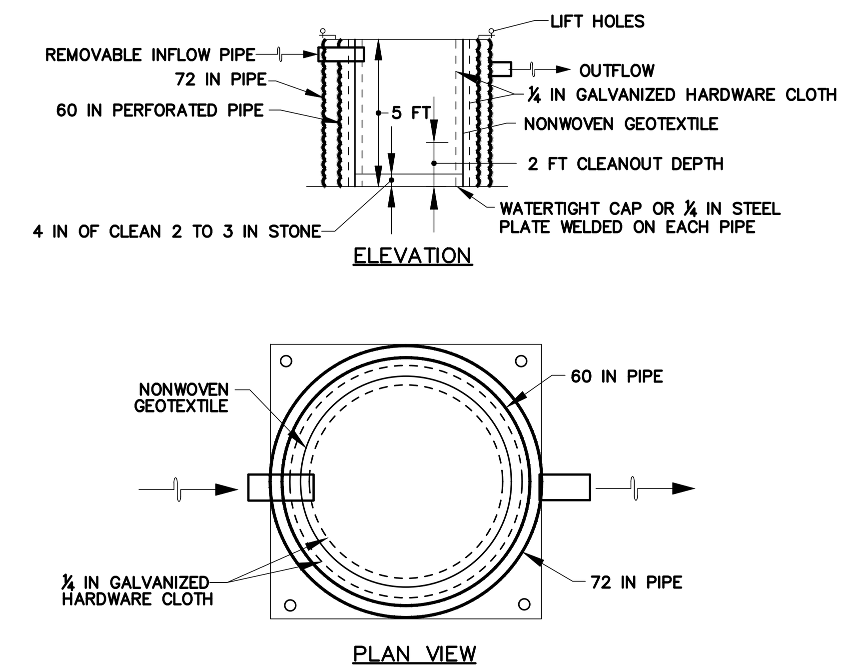

CONSTRUCTION SPECIFICATIONS

1. PROVIDE 1 CUBIC FOOT OF STORAGE FOR EACH GALLON PER MINUTE OF PUMP CAPACITY. REQUIRED STORAGE VOLUME MAY BE ATTAINED BY PLACEMENT OF TANKS IN PARALLEL WITH INFLOW EVENLY DISTRIBUTED AMONG TANKS. OVERTOPPING OF TANKS IS NOT PERMITTED.
2. USE 60 INCH CORRUGATED METAL OR PLASTIC PIPE WITH 1 INCH DIAMETER PERFORATIONS, 6 INCHES ON CENTER FOR THE INNER PIPE. LINE PIPE WITH NONWOVEN GEOTEXTILE, AS SPECIFIED IN SECTION H-1 MATERIALS, SANDWICHED BETWEEN, AND ATTACHED TO, ¼ INCH HARDWARE CLOTH.
3. OVERLAP GEOTEXTILE 8 INCHES MINIMUM AT VERTICAL SEAM AND AT THE BOTTOM PLATE.
4. ANCHOR GEOTEXTILE AT BOTTOM OF TANK WITH 4 INCHES OF 2 TO 3 INCH CLEAN STONE OR EQUIVALENT RECYCLED CONCRETE.
5. USE 72 INCH CORRUGATED METAL OR PLASTIC OUTER PIPE WITH PERMANENT OUTFLOW PIPE WITH INVERT LOWER THAN INFLOW PIPE
6. INFLOW PIPE MUST DISCHARGE INTO INNER PIPE AND BE REMOVABLE.
7. PLACE TANK ON LEVEL SURFACE AND DISCHARGE TO A STABLE AREA AT A NONEROSIVE RATE.
8. A PORTABLE SEDIMENT TANK REQUIRES FREQUENT MAINTENANCE. REMOVE ACCUMULATED SEDIMENT FROM INNER PIPE WHEN IT REACHES TWO FEET IN DEPTH. IF SYSTEM CLOGS, PULL OUT INNER PIPE, REMOVE ACCUMULATED SEDIMENT, AND REPLACE GEOTEXTILE. KEEP POINT OF DISCHARGE FREE OF EROSION.

MARYLAND STANDARDS AND SPECIFICATIONS FOR SOIL EROSION AND SEDIMENT CONTROL
MODIFIED FOR USE IN BALTIMORE COUNTY

U.S. DEPARTMENT OF AGRICULTURE NATURAL RESOURCES CONSERVATION SERVICE | 2011 | MARYLAND DEPARTMENT OF THE ENVIRONMENT WATER MANAGEMENT ADMINISTRATION

DETAIL F-4 FILTER BAG

STANDARD SYMBOL: FB

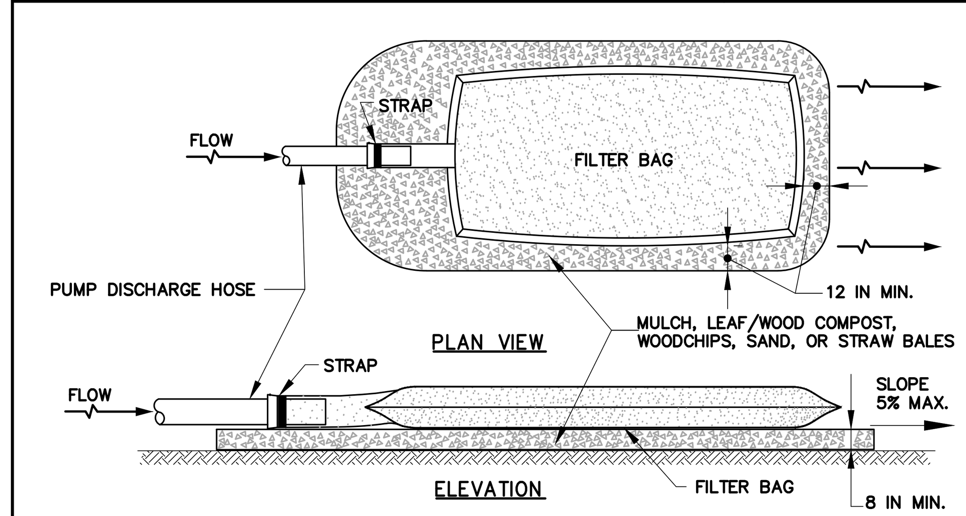

CONSTRUCTION SPECIFICATIONS

1. TIGHTLY SEAL SLEEVE AROUND THE PUMP DISCHARGE HOSE WITH A STRAP OR SIMILAR DEVICE.
2. PLACE FILTER BAG ON SUITABLE BASE (E.G., MULCH, LEAF/WOOD COMPOST, WOODCHIPS, SAND, OR STRAW BALES) LOCATED ON A LEVEL OR 5% MAXIMUM SLOPING SURFACE. DISCHARGE TO A STABILIZED AREA. EXTEND BASE A MINIMUM OF 12 INCHES FROM EDGES OF BAG.
3. CONTROL PUMPING RATE TO PREVENT EXCESSIVE PRESSURE WITHIN THE FILTER BAG IN ACCORDANCE WITH THE MANUFACTURER RECOMMENDATIONS. AS THE BAG FILLS WITH SEDIMENT, REDUCE PUMPING RATE.
4. REMOVE AND PROPERLY DISPOSE OF FILTER BAG UPON COMPLETION OF PUMPING OPERATIONS OR AFTER BAG HAS REACHED CAPACITY, WHICHEVER OCCURS FIRST. SPREAD THE DEWATERED SEDIMENT FROM THE BAG IN AN APPROVED UPLAND AREA AND STABILIZE WITH SEED AND MULCH BY THE END OF THE WORK DAY. RESTORE THE SURFACE AREA BENEATH THE BAG TO ORIGINAL CONDITION UPON REMOVAL OF THE DEVICE.
5. USE NONWOVEN GEOTEXTILE WITH DOUBLE STITCHED SEAMS USING HIGH STRENGTH THREAD. SIZE SLEEVE TO ACCOMMODATE A MAXIMUM 4 INCH DIAMETER PUMP DISCHARGE HOSE. THE BAG MUST BE MANUFACTURED FROM A NONWOVEN GEOTEXTILE THAT MEETS OR EXCEEDS MINIMUM AVERAGE ROLL VALUES (MARV) FOR THE FOLLOWING:

GRAB TENSILE	250 LB	ASTM D-4632
PUNCTURE	150 LB	ASTM D-4833
FLOW RATE	70 GAL/MIN/FT²	ASTM D-4491
PERMITTIVITY (SEC⁻¹)	1.2 SEC⁻¹	ASTM D-4491
UV RESISTANCE	70% STRENGTH @ 500 HOURS	ASTM D-4355
APPARENT OPENING SIZE (AOS)	0.15–0.18 MM	ASTM D-4751
SEAM STRENGTH	90%	ASTM D-4632

6. REPLACE FILTER BAG IF BAG CLOGS OR HAS RIPS, TEARS, OR PUNCTURES. DURING OPERATION KEEP CONNECTION BETWEEN PUMP HOSE AND FILTER BAG WATER TIGHT. REPLACE BEDDING IF IT BECOMES DISPLACED.

MARYLAND STANDARDS AND SPECIFICATIONS FOR SOIL EROSION AND SEDIMENT CONTROL
MODIFIED FOR USE IN BALTIMORE COUNTY

U.S. DEPARTMENT OF AGRICULTURE NATURAL RESOURCES CONSERVATION SERVICE | 2011 | MARYLAND DEPARTMENT OF THE ENVIRONMENT WATER MANAGEMENT ADMINISTRATION

DETAIL B-1 STABILIZED CONSTRUCTION ENTRANCE

STANDARD SYMBOL: SCE

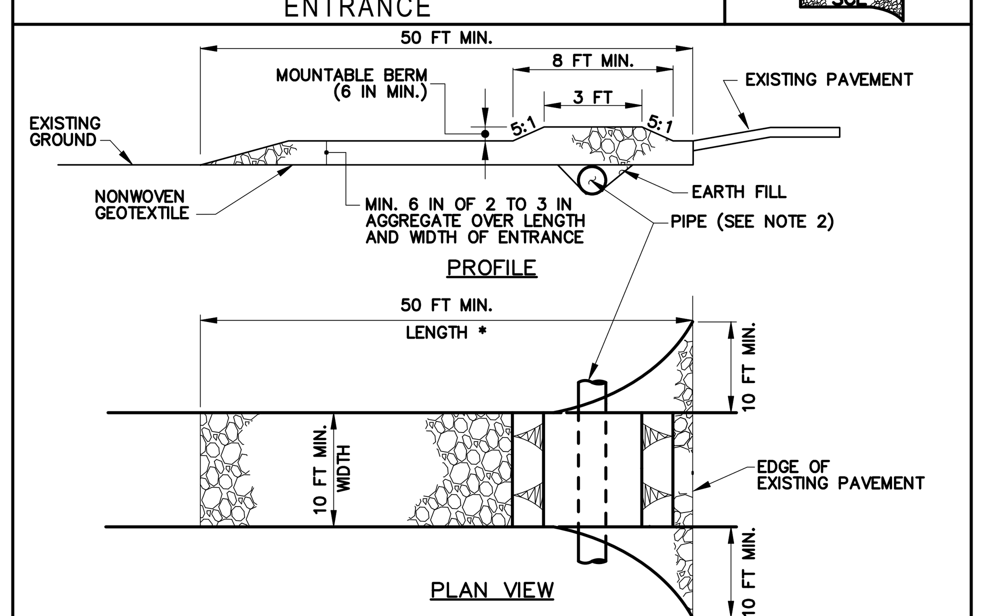

CONSTRUCTION SPECIFICATIONS

1. PLACE STABILIZED CONSTRUCTION ENTRANCE IN ACCORDANCE WITH THE APPROVED PLAN. VEHICLES MUST TRAVEL OVER THE ENTIRE LENGTH OF THE SCE. USE MINIMUM LENGTH OF 50 FEET (*30 FEET FOR SINGLE RESIDENCE LOT). USE MINIMUM WIDTH OF 10 FEET. FLARE SCE 10 FEET MINIMUM AT THE EXISTING ROAD TO PROVIDE A TURNING RADIUS.
2. PIPE ALL SURFACE WATER FLOWING TO OR DIVERTED TOWARD THE SCE UNDER THE ENTRANCE, MAINTAINING POSITIVE DRAINAGE. PROTECT PIPE INSTALLED THROUGH THE SCE WITH A MOUNTABLE BERM WITH 5:1 SLOPES AND A MINIMUM OF 12 INCHES OF STONE OVER THE PIPE. PROVIDE PIPE AS SPECIFIED ON APPROVED PLAN. WHEN THE SCE IS LOCATED AT A HIGH SPOT AND HAS NO DRAINAGE TO CONVEY, A PIPE IS NOT NECESSARY. A MOUNTABLE BERM IS REQUIRED WHEN SCE IS NOT LOCATED AT A HIGH SPOT.
3. PREPARE SUBGRADE AND PLACE NONWOVEN GEOTEXTILE, AS SPECIFIED IN SECTION H-1 MATERIALS.
4. PLACE CRUSHED AGGREGATE (2 TO 3 INCHES IN SIZE) OR EQUIVALENT RECYCLED CONCRETE (WITHOUT REBAR) AT LEAST 6 INCHES DEEP OVER THE LENGTH AND WIDTH OF THE SCE.
5. MAINTAIN ENTRANCE IN A CONDITION THAT MINIMIZES TRACKING OF SEDIMENT. ADD STONE OR MAKE OTHER REPAIRS AS CONDITIONS DEMAND TO MAINTAIN CLEAN SURFACE, MOUNTABLE BERM, AND SPECIFIED DIMENSIONS. IMMEDIATELY REMOVE STONE AND/OR SEDIMENT SPILLED, DROPPED, OR TRACKED ONTO ADJACENT ROADWAY BY VACUUMING, SCRAPING, AND/OR SWEEPING. WASHING ROADWAY TO REMOVE MUD TRACKED ONTO PAVEMENT IS NOT ACCEPTABLE UNLESS WASH WATER IS DIRECTED TO AN APPROVED SEDIMENT CONTROL PRACTICE.

MARYLAND STANDARDS AND SPECIFICATIONS FOR SOIL EROSION AND SEDIMENT CONTROL
MODIFIED FOR USE IN BALTIMORE COUNTY

U.S. DEPARTMENT OF AGRICULTURE NATURAL RESOURCES CONSERVATION SERVICE | 2011 | MARYLAND DEPARTMENT OF THE ENVIRONMENT WATER MANAGEMENT ADMINISTRATION

H-1 STANDARDS AND SPECIFICATIONS FOR MATERIALS

TABLE H.1: GEOTEXTILE FABRICS

PROPERTY	TEST METHOD	WOVEN SLIT FILM GEOTEXTILE MD	WOVEN SLIT FILM GEOTEXTILE CD	WOVEN MONOFILAMENT GEOTEXTILE MD	WOVEN MONOFILAMENT GEOTEXTILE CD	NONWOVEN GEOTEXTILE MD	NONWOVEN GEOTEXTILE CD
		MINIMUM AVERAGE ROLL VALUE [1]					
GRAB TENSILE STRENGTH	ASTM D-4632	200 lb	200 lb	370 lb	250 lb	200 lb	200 lb
GRAB TENSILE ELONGATION	ASTM D-4632	15%	10%	15%	15%	50%	50%
TRAPEZOIDAL TEAR STRENGTH	ASTM D-4533	75 lb	75 lb	100 lb	60 lb	80 lb	80 lb
PUNCTURE STRENGTH	ASTM D-6241	450 lb		900 lb		450 lb	
APPARENT OPENING SIZE [2]	ASTM D-4751	U.S. SIEVE 30 (0.59 mm)		U.S. SIEVE 70 (0.21 mm)		U.S. SIEVE 70 (0.21 mm)	
PERMITTIVITY	ASTM D-4491	0.05 SEC⁻¹		0.28 SEC⁻¹		1.1 SEC⁻¹	
ULTRAVIOLET RESISTANCE RETAINED AT 500 HOURS	ASTM D-4355	70% STRENGTH		70% STRENGTH		70% STRENGTH	

[1] ALL NUMERIC VALUES EXCEPT APPARENT OPENING SIZE (AOS) REPRESENT MINIMUM AVERAGE ROLL VALUES (MARV). MARV IS CALCULATED AS THE TYPICAL MINUS TWO STANDARD DEVIATIONS. MD IS MACHINE DIRECTION; CD IS CROSS DIRECTION.

[2] VALUES FOR AOS REPRESENT THE AVERAGE MAXIMUM OPENING.

GEOTEXTILES MUST BE EVALUATED BY THE NATIONAL TRANSPORTATION PRODUCT EVALUATION PROGRAM (NTPEP) AND CONFORM TO THE VALUES IN TABLE H.1.

THE GEOTEXTILE MUST BE INERT TO COMMONLY ENCOUNTERED CHEMICALS AND HYDROCARBONS AND MUST BE ROT AND MILDEW RESISTANT. THE GEOTEXTILE MUST BE MANUFACTURED FROM FIBERS CONSISTING OF LONG CHAIN SYNTHETIC POLYMERS AND COMPOSED OF A MINIMUM OF 95 PERCENT BY WEIGHT OF POLYOLEFINS OR POLYESTERS, AND FORMED INTO A STABLE NETWORK SO THE FILAMENTS OR YARNS RETAIN THEIR DIMENSIONAL STABILITY RELATIVE TO EACH OTHER, INCLUDING SELVAGES.

WHEN MORE THAN ONE SECTION OF GEOTEXTILE IS NECESSARY, OVERLAP THE SECTIONS BY AT LEAST ONE FOOT. THE GEOTEXTILE MUST BE PULLED TAUT OVER THE APPLIED SURFACE. EQUIPMENT MUST NOT RUN OVER EXPOSED FABRIC. WHEN PLACING RIPRAP ON GEOTEXTILE, DO NOT EXCEED A ONE FOOT DROP HEIGHT.

DETAIL H-6 ONSITE CONCRETE WASHOUT STRUCTURE

STANDARD SYMBOL: CWS

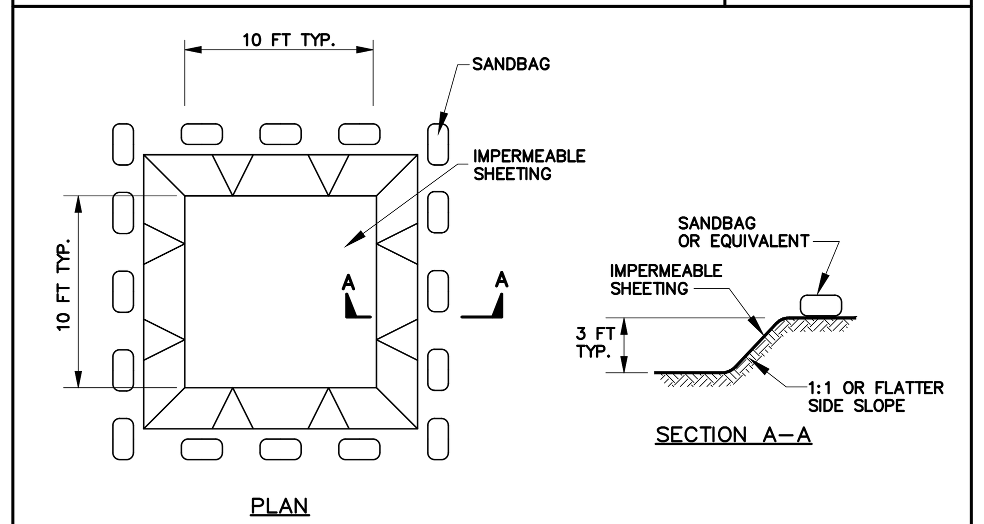

EXCAVATED WASHOUT STRUCTURE

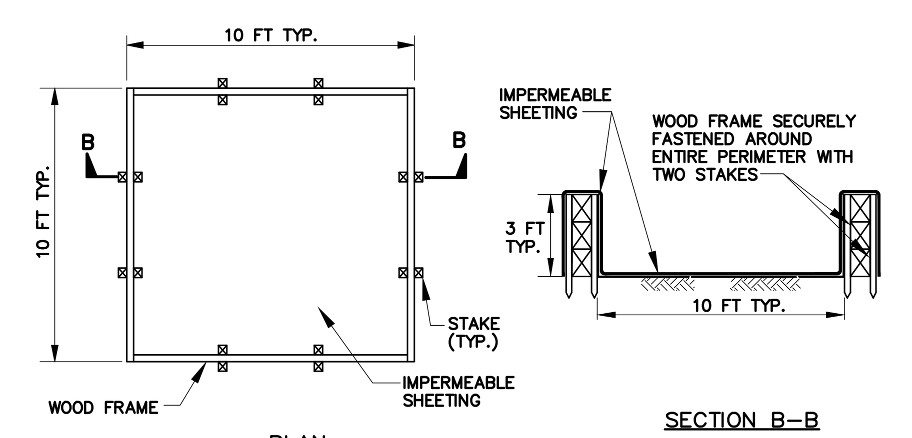

WASHOUT STRUCTURE WITH WOOD PLANKS

1 OF 2

MARYLAND STANDARDS AND SPECIFICATIONS FOR SOIL EROSION AND SEDIMENT CONTROL

U.S. DEPARTMENT OF AGRICULTURE NATURAL RESOURCES CONSERVATION SERVICE | 2011 | MARYLAND DEPARTMENT OF ENVIRONMENT WATER MANAGEMENT ADMINISTRATION

DETAIL H-6 ONSITE CONCRETE WASHOUT STRUCTURE

STANDARD SYMBOL: CWS

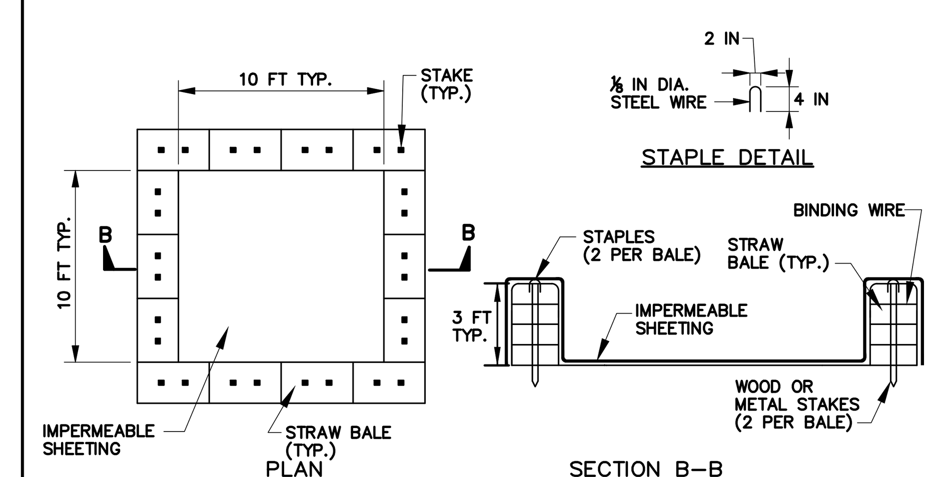

NOTE: CAN BE TWO STACKED BALES OR PARTIALLY EXCAVATED TO REACH 3 FT DEPTH

WASHOUT STRUCTURE WITH STRAW BALES

CONSTRUCTION SPECIFICATIONS

1. LOCATE WASHOUT STRUCTURE A MINIMUM OF 50 FEET AWAY FROM OPEN CHANNELS, STORM DRAIN INLETS, SENSITIVE AREAS, WETLANDS, BUFFERS AND WATER COURSES AND AWAY FROM CONSTRUCTION TRAFFIC.
2. SIZE WASHOUT STRUCTURE FOR VOLUME NECESSARY TO CONTAIN WASH WATER AND SOLIDS AND MAINTAIN AT LEAST 4 INCHES OF FREEBOARD. TYPICAL DIMENSIONS ARE 10 FEET X 10 FEET X 3 FEET DEEP.
3. PREPARE SOIL BASE FREE OF ROCKS OR OTHER DEBRIS THAT MAY CAUSE TEARS OR HOLES IN THE LINER. FOR LINER, USE 10 MIL OR THICKER UV RESISTANT, IMPERMEABLE SHEETING, FREE OF HOLES AND TEARS OR OTHER DEFECTS THAT COMPROMISE IMPERMEABILITY OF THE MATERIAL.
4. PROVIDE A SIGN FOR THE WASHOUT IN CLOSE PROXIMITY TO THE FACILITY.
5. KEEP CONCRETE WASHOUT STRUCTURE WATER TIGHT. REPLACE IMPERMEABLE LINER IF DAMAGED (E.G., RIPPED OR PUNCTURED). EMPTY OR REPLACE WASHOUT STRUCTURE THAT IS 75 PERCENT FULL, AND DISPOSE OF ACCUMULATED MATERIAL PROPERLY. DO NOT REUSE PLASTIC LINER. WET-VACUUM STORED LIQUIDS THAT HAVE NOT EVAPORATED AND DISPOSE OF IN AN APPROVED MANNER. PRIOR TO FORECASTED RAINSTORMS, REMOVE LIQUIDS OR COVER STRUCTURE TO PREVENT OVERFLOWS. REMOVE HARDENED SOLIDS, WHOLE OR BROKEN UP, FOR DISPOSAL OR RECYCLING. MAINTAIN RUNOFF DIVERSION AROUND EXCAVATED WASHOUT STRUCTURE UNTIL STRUCTURE IS REMOVED.

2 OF 2

MARYLAND STANDARDS AND SPECIFICATIONS FOR SOIL EROSION AND SEDIMENT CONTROL

U.S. DEPARTMENT OF AGRICULTURE NATURAL RESOURCES CONSERVATION SERVICE | 2011 | MARYLAND DEPARTMENT OF ENVIRONMENT WATER MANAGEMENT ADMINISTRATION

ALL DIMENSIONS AND EXISTING CONDITIONS
SHALL BE CHECKED AND VERIFIED BY THE CONTRACTOR AT THE SITE.

FREDERICK SOIL CONSERVATION DISTRICT
SOIL EROSION AND SEDIMENT CONTROL PLAN APPROVAL

BY: Steve Leathem

DATE: 5-10-22

SCD APPROVAL FOR SEDIMENT AND EROSION CONTROL IS CONTINGENT UPON ISSUANCE OF ALL APPLICABLE REGULATORY PERMITS.

PROFESSIONAL CERTIFICATION
I HEREBY CERTIFY THAT THESE DOCUMENTS WERE PREPARED OR APPROVED BY ME, AND THAT I AM A DULY LICENSED PROFESSIONAL ENGINEER UNDER THE LAWS OF THE STATE OF MARYLAND.
LICENSE NO. 22765 EXPIRATION DATE 07/09/2024
01/25/2023

RK&K
700 EAST PRATT STREET, SUITE 500
BALTIMORE, MARYLAND 21202
800.787.3755

NO.	DESCRIPTION	BY	DATE

REVISIONS

TOWN OF EMMITSBURG, MARYLAND
NEW CREAMERY ROAD SEWAGE PUMP STATION
EMMITSBURG, MARYLAND

GRADING AND SEDIMENT CONTROL DETAILS

ENGINEER	CHECKED BY
JSG	RAL
DRAWN BY	DATE
JAB	1/2023

RK&K PROJECT NUMBER 19082

DRAWING NUMBER SC3

RKK21\SYS – \\ad.rkk.com\fs\Cloud\Projects\2019\19082_CreameryPS\Cadd\Plans\Civil\19082CR-014-CP-SC1.dwg Jan 27, 2023 – 8:51am Plot Scale 1:1

Division of Planning and Permitting
Department of Development Review Engineering
APPROVED: 06/08/22
Signature:

DETAIL E-1 SILT FENCE

STANDARD SYMBOL: SF

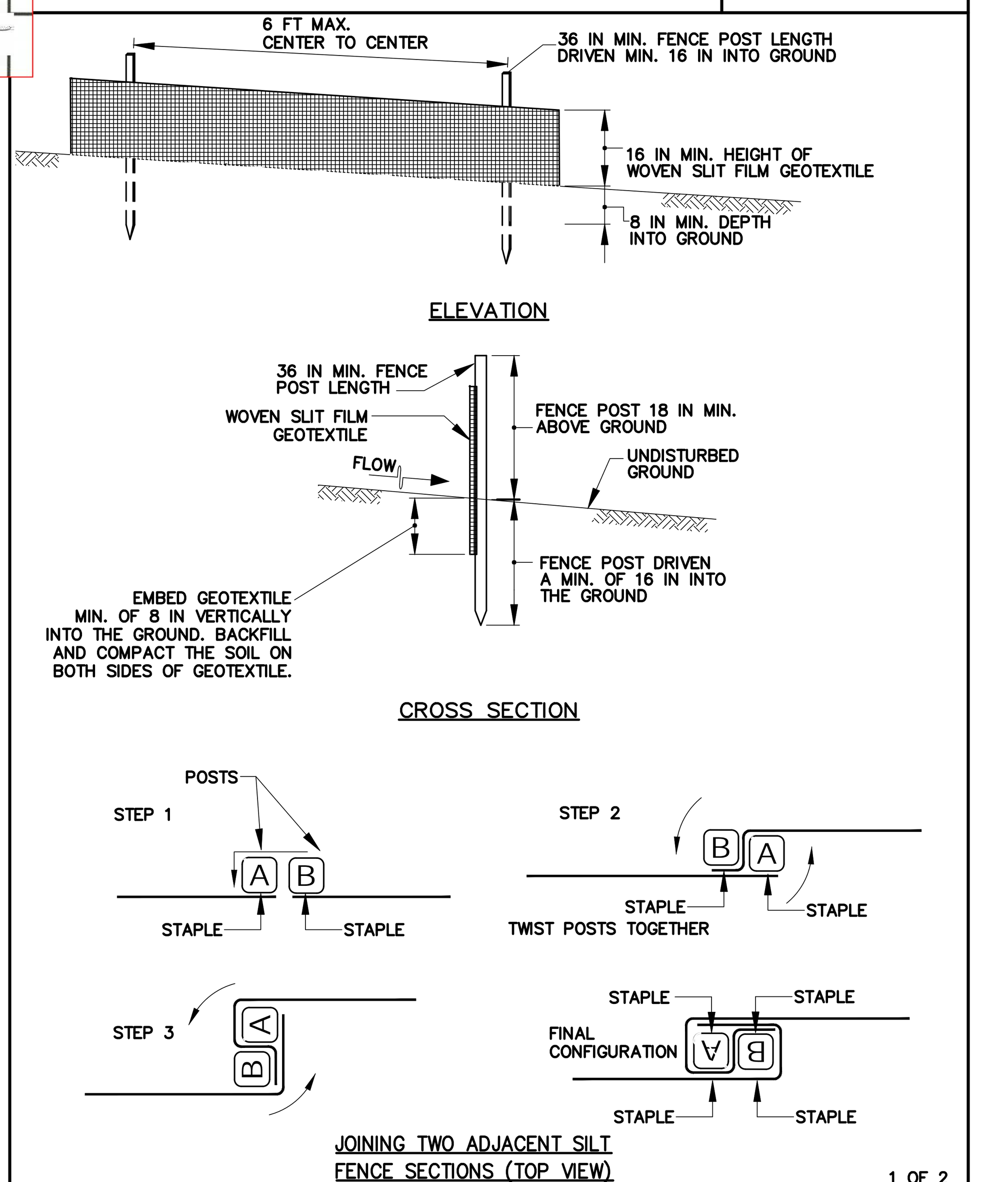

1 OF 2

MARYLAND STANDARDS AND SPECIFICATIONS FOR SOIL EROSION AND SEDIMENT CONTROL
MODIFIED FOR USE IN BALTIMORE COUNTY

U.S. DEPARTMENT OF AGRICULTURE NATURAL RESOURCES CONSERVATION SERVICE	2011	MARYLAND DEPARTMENT OF THE ENVIRONMENT WATER MANAGEMENT ADMINISTRATION

DETAIL E-1 SILT FENCE

STANDARD SYMBOL: SF

CONSTRUCTION SPECIFICATIONS

1. USE WOOD POSTS 1¾ X 1¾ ± 1/16 INCH (MINIMUM) SQUARE CUT OF SOUND QUALITY HARDWOOD. AS AN ALTERNATIVE TO WOODEN POST USE STANDARD "T" OR "U" SECTION STEEL POSTS WEIGHING NOT LESS THAN 1 POUND PER LINEAR FOOT.
2. USE 36 INCH MINIMUM POSTS DRIVEN 16 INCH MINIMUM INTO GROUND NO MORE THAN 6 FEET APART.
3. USE WOVEN SLIT FILM GEOTEXTILE AS SPECIFIED IN SECTION H–1 MATERIALS AND FASTEN GEOTEXTILE SECURELY TO UPSLOPE SIDE OF FENCE POSTS WITH WIRE TIES OR STAPLES AT TOP AND MID–SECTION.
4. PROVIDE MANUFACTURER CERTIFICATION TO THE AUTHORIZED REPRESENTATIVE OF THE INSPECTION/ENFORCEMENT AUTHORITY SHOWING THAT THE GEOTEXTILE USED MEETS THE REQUIREMENTS IN SECTION H–1 MATERIALS.
5. EMBED GEOTEXTILE A MINIMUM OF 8 INCHES VERTICALLY INTO THE GROUND. BACKFILL AND COMPACT THE SOIL ON BOTH SIDES OF FABRIC.
6. WHERE TWO SECTIONS OF GEOTEXTILE ADJOIN: OVERLAP, TWIST, AND STAPLE TO POST IN ACCORDANCE WITH THIS DETAIL.
7. EXTEND BOTH ENDS OF THE SILT FENCE A MINIMUM OF FIVE HORIZONTAL FEET UPSLOPE AT 45 DEGREES TO THE MAIN FENCE ALIGNMENT TO PREVENT RUNOFF FROM GOING AROUND THE ENDS OF THE SILT FENCE.
8. REMOVE ACCUMULATED SEDIMENT AND DEBRIS WHEN BULGES DEVELOP IN SILT FENCE OR WHEN SEDIMENT REACHES 25% OF FENCE HEIGHT. REPLACE GEOTEXTILE IF TORN. IF UNDERMINING OCCURS, REINSTALL FENCE.

2 OF 2

MARYLAND STANDARDS AND SPECIFICATIONS FOR SOIL EROSION AND SEDIMENT CONTROL
MODIFIED FOR USE IN BALTIMORE COUNTY

U.S. DEPARTMENT OF AGRICULTURE NATURAL RESOURCES CONSERVATION SERVICE	2011	MARYLAND DEPARTMENT OF THE ENVIRONMENT WATER MANAGEMENT ADMINISTRATION

DETAIL C-8 MOUNTABLE BERM

STANDARD SYMBOL: MB

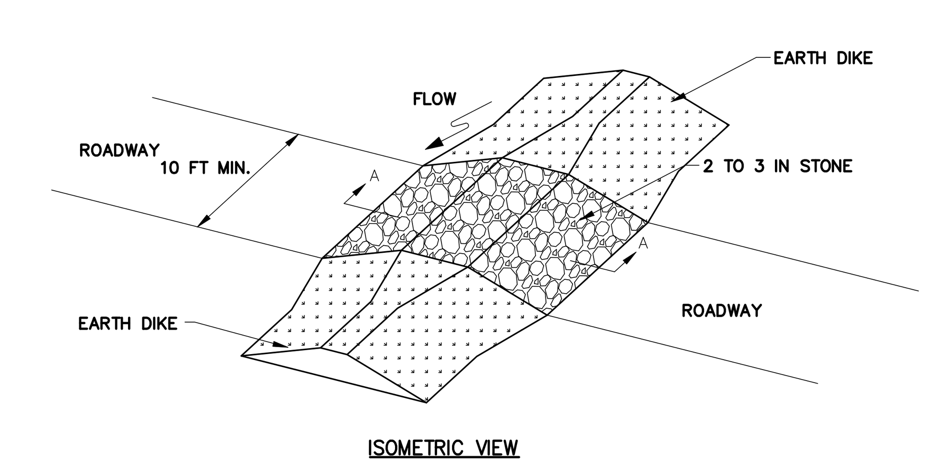

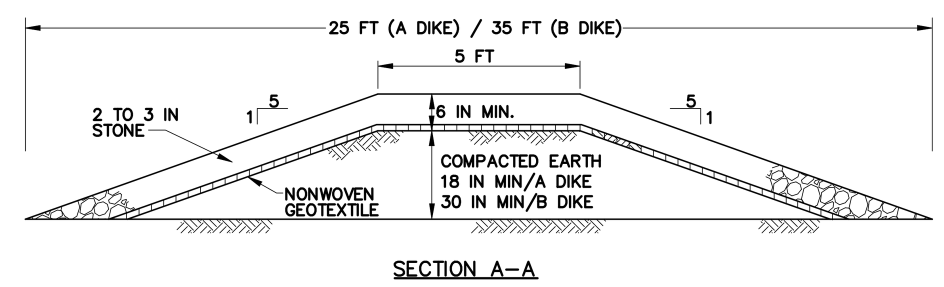

CONSTRUCTION SPECIFICATIONS

1. USE MINIMUM WIDTH OF 10 FEET TO ALLOW FOR VEHICULAR PASSAGE.
2. PLACE NONWOVEN GEOTEXTILE, AS SPECIFIED IN SECTION H–1 MATERIALS, OVER THE EARTH MOUND PRIOR TO PLACING STONE.
3. PLACE 2 TO 3 INCH STONE OR EQUIVALENT RECYCLED CONCRETE AT LEAST 6 INCHES DEEP OVER THE LENGTH AND WIDTH OF THE MOUNTABLE BERM.
4. MAINTAIN LINE, GRADE, AND CROSS SECTION. ADD STONE OR MAKE OTHER REPAIRS AS CONDITIONS DEMAND TO MAINTAIN SPECIFIED DIMENSIONS. REMOVE ACCUMULATED SEDIMENT AND DEBRIS. MAINTAIN POSITIVE DRAINAGE.

MARYLAND STANDARDS AND SPECIFICATIONS FOR SOIL EROSION AND SEDIMENT CONTROL

U.S. DEPARTMENT OF AGRICULTURE NATURAL RESOURCES CONSERVATION SERVICE	2011	MARYLAND DEPARTMENT OF ENVIRONMENT WATER MANAGEMENT ADMINISTRATION

DETAIL B-4-6-A TEMPORARY SOIL STABILIZATION MATTING CHANNEL APPLICATION

STANDARD SYMBOL: TSSMC – 2.0 lb/ft² (* INCLUDE SHEAR STRESS)

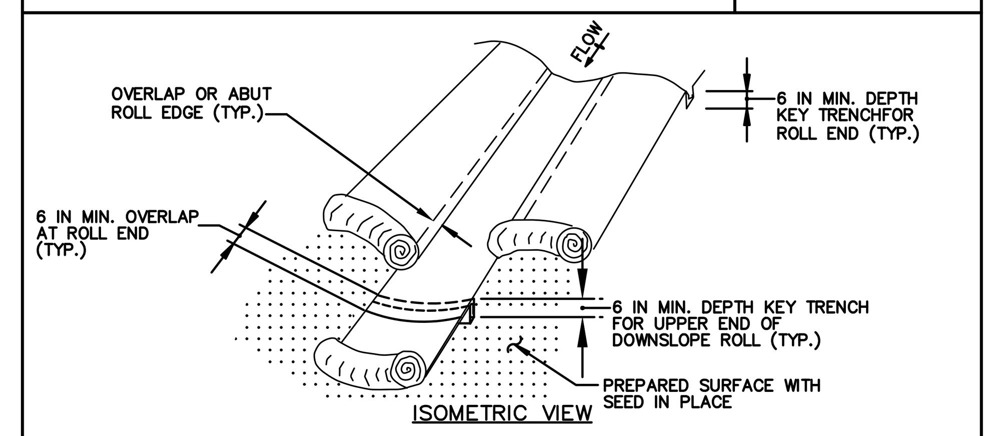

CONSTRUCTION SPECIFICATIONS

1. USE MATTING THAT HAS A DESIGN VALUE FOR SHEAR STRESS EQUAL TO OR HIGHER THAN THE SHEAR STRESS DESIGNATED ON APPROVED PLANS.
2. USE TEMPORARY SOIL STABILIZATION MATTING MADE OF DEGRADABLE (LASTS 6 MONTHS MINIMUM) NATURAL OR MAN–MADE FIBERS (MOSTLY ORGANIC). MAT MUST HAVE UNIFORM THICKNESS AND DISTRIBUTION OF FIBERS THROUGHOUT AND BE SMOLDER RESISTANT. CHEMICALS USED IN THE MAT MUST BE NON–LEACHING AND NON–TOXIC TO VEGETATION AND SEED GERMINATION AND NON–INJURIOUS TO THE SKIN. IF PRESENT, NETTING MUST BE EXTRUDED PLASTIC WITH A MAXIMUM MESH OPENING OF 2x2 INCHES AND SUFFICIENTLY BONDED OR SEWN ON 2 INCH CENTERS ALONG LONGITUDINAL AXIS OF THE MATERIAL TO PREVENT SEPARATION OF THE NET FROM THE PARENT MATERIAL.
3. SECURE MATTING USING STEEL STAPLES, WOOD STAKES, OR BIODEGRADABLE EQUIVALENT. STAPLES MUST BE "U" OR "T" SHAPED STEEL WIRE HAVING A MINIMUM GAUGE OF NO. 11 AND NO. 8 RESPECTIVELY. "U" SHAPED STAPLES MUST AVERAGE 1 TO 1½ INCHES WIDE AND BE A MINIMUM OF 6 INCHES LONG. "T" SHAPED STAPLES MUST HAVE A MINIMUM 8 INCH MAIN LEG, A MINIMUM 1 INCH SECONDARY LEG, AND A MINIMUM 4 INCH HEAD. WOOD STAKES MUST BE ROUGH–SAWN HARDWOOD, 12 TO 24 INCHES IN LENGTH, 1x3 INCH IN CROSS SECTION, AND WEDGE SHAPED AT THE BOTTOM.
4. PERFORM FINAL GRADING, TOPSOIL APPLICATION, SEEDBED PREPARATION, AND PERMANENT SEEDING IN ACCORDANCE WITH SPECIFICATIONS. PLACE MATTING WITHIN 48 HOURS OF COMPLETING SEEDING OPERATIONS UNLESS END OF WORKDAY STABILIZATION IS SPECIFIED ON THE APPROVED EROSION AND SEDIMENT CONTROL PLAN.
5. UNROLL MATTING IN DIRECTION OF WATER FLOW, CENTERING THE FIRST ROLL ON THE CHANNEL CENTERLINE. WORK FROM CENTER OF CHANNEL OUTWARD WHEN PLACING ROLLS. LAY MAT SMOOTHLY AND FIRMLY ON THE SEEDED SURFACE. AVOID STRETCHING THE MATTING.
6. KEY–IN UPSTREAM END OF EACH MAT ROLL BY DIGGING A 6 INCH (MINIMUM) TRENCH AT THE UPSTREAM END OF THE MATTING, PLACING THE ROLL END IN THE TRENCH, STAPLING THE MAT IN PLACE, REPLACING THE EXCAVATED MATERIAL, AND TAMPING TO SECURE THE MAT END.
7. OVERLAP OR ABUT THE ROLL EDGES PER MANUFACTURER RECOMMENDATIONS. OVERLAP ROLL ENDS BY 6 INCHES (MINIMUM), WITH THE UPSTREAM MAT OVERLAPPING ON TOP OF THE NEXT DOWNSTREAM MAT.
8. STAPLE/STAKE MAT IN A STAGGERED PATTERN ON 4 FOOT (MAXIMUM) CENTERS THROUGHOUT AND 2 FOOT (MAXIMUM) CENTERS ALONG SEAMS, JOINTS, AND ROLL ENDS.
9. ESTABLISH AND MAINTAIN VEGETATION SO THAT REQUIREMENTS FOR ADEQUATE VEGETATIVE ESTABLISHMENT ARE CONTINUOUSLY MET IN ACCORDANCE WITH SECTION B–4 VEGETATIVE STABILIZATION.

MARYLAND STANDARDS AND SPECIFICATIONS FOR SOIL EROSION AND SEDIMENT CONTROL

U.S. DEPARTMENT OF AGRICULTURE NATURAL RESOURCES CONSERVATION SERVICE	2011	MARYLAND DEPARTMENT OF ENVIRONMENT WATER MANAGEMENT ADMINISTRATION

DETAIL B-4-6-B TEMPORARY SOIL STABILIZATION MATTING SLOPE APPLICATION

STANDARD SYMBOL: TSSMS – 2.0 lb/ft² (* INCLUDE SHEAR STRESS)

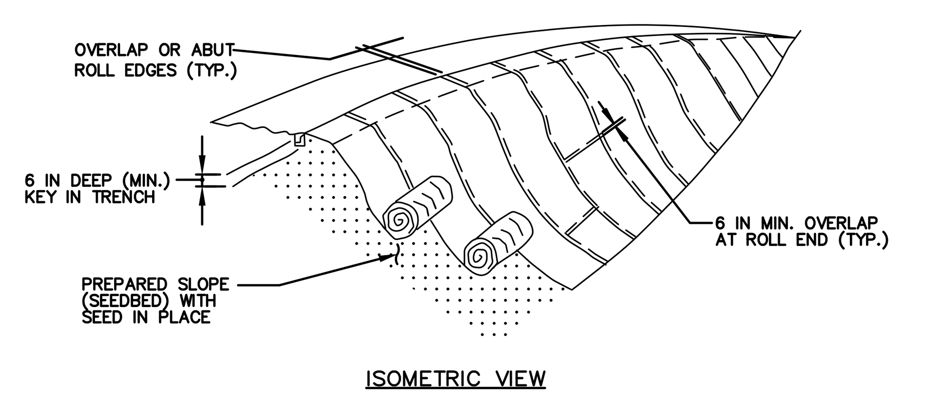

CONSTRUCTION SPECIFICATIONS

1. USE MATTING THAT HAS A DESIGN VALUE FOR SHEAR STRESS EQUAL TO OR HIGHER THAN THE SHEAR STRESS DESIGNATED ON APPROVED PLANS.
2. USE TEMPORARY SOIL STABILIZATION MATTING MADE OF DEGRADABLE (LASTS 6 MONTHS MINIMUM) NATURAL OR MAN–MADE FIBERS (MOSTLY ORGANIC). MAT MUST HAVE UNIFORM THICKNESS AND DISTRIBUTION OF FIBERS THROUGHOUT AND BE SMOLDER RESISTANT. CHEMICALS USED IN THE MAT MUST BE NON–LEACHING AND NON–TOXIC TO VEGETATION AND SEED GERMINATION AND NON–INJURIOUS TO THE SKIN. IF PRESENT, NETTING MUST BE EXTRUDED PLASTIC WITH A MAXIMUM MESH OPENING OF 2x2 INCHES AND SUFFICIENTLY BONDED OR SEWN ON 2 INCH CENTERS ALONG LONGITUDINAL AXIS OF THE MATERIAL TO PREVENT SEPARATION OF THE NET FROM THE PARENT MATERIAL.
3. SECURE MATTING USING STEEL STAPLES, WOOD STAKES, OR BIODEGRADABLE EQUIVALENT. STAPLES MUST BE "U" OR "T" SHAPED STEEL WIRE HAVING A MINIMUM GAUGE OF NO. 11 AND NO. 8 RESPECTIVELY. "U" SHAPED STAPLES MUST AVERAGE 1 TO 1½ INCHES WIDE AND BE A MINIMUM OF 6 INCHES LONG. "T" SHAPED STAPLES MUST HAVE A MINIMUM 8 INCH MAIN LEG, A MINIMUM 1 INCH SECONDARY LEG, AND A MINIMUM 4 INCH HEAD. WOOD STAKES MUST BE ROUGH–SAWN HARDWOOD, 12 TO 24 INCHES IN LENGTH, 1x3 INCH IN CROSS SECTION, AND WEDGE SHAPED AT THE BOTTOM.
4. PERFORM FINAL GRADING, TOPSOIL APPLICATION, SEEDBED PREPARATION, AND PERMANENT SEEDING IN ACCORDANCE WITH SPECIFICATIONS. PLACE MATTING WITHIN 48 HOURS OF COMPLETING SEEDING OPERATIONS UNLESS END OF WORKDAY STABILIZATION IS SPECIFIED ON THE APPROVED EROSION & SEDIMENT CONTROL PLAN.
5. UNROLL MATTING DOWNSLOPE. LAY MAT SMOOTHLY AND FIRMLY UPON THE SEEDED SURFACE. AVOID STRETCHING THE MATTING.
6. OVERLAP OR ABUT ROLL EDGES PER MANUFACTURER RECOMMENDATIONS. OVERLAP ROLL ENDS BY 6 INCHES (MINIMUM), WITH THE UPSLOPE MAT OVERLAPPING ON TOP OF THE DOWNSLOPE MAT.
7. KEY IN THE UPSLOPE END OF MAT 6 INCHES (MINIMUM) BY DIGGING A TRENCH, PLACING THE MATTING ROLL END IN THE TRENCH, STAPLING THE MAT IN PLACE, REPLACING THE EXCAVATED MATERIAL, AND TAMPING TO SECURE THE MAT END IN THE KEY.
8. STAPLE/STAKE MAT IN A STAGGERED PATTERN ON 4 FOOT (MAXIMUM) CENTERS THROUGHOUT AND 2 FOOT (MAXIMUM) CENTERS ALONG SEAMS, JOINTS, AND ROLL ENDS.
9. ESTABLISH AND MAINTAIN VEGETATION SO THAT REQUIREMENTS FOR ADEQUATE VEGETATIVE ESTABLISHMENT ARE CONTINUOUSLY MET IN ACCORDANCE WITH SECTION B–4 VEGETATIVE STABILIZATION.

MARYLAND STANDARDS AND SPECIFICATIONS FOR SOIL EROSION AND SEDIMENT CONTROL

U.S. DEPARTMENT OF AGRICULTURE NATURAL RESOURCES CONSERVATION SERVICE	2011	MARYLAND DEPARTMENT OF ENVIRONMENT WATER MANAGEMENT ADMINISTRATION

DETAIL D-4-1-C ROCK OUTLET PROTECTION III

STANDARD SYMBOL: ROPIII

DISCHARGE TO AN UNCONFINED CHANNEL OR FLAT AREA

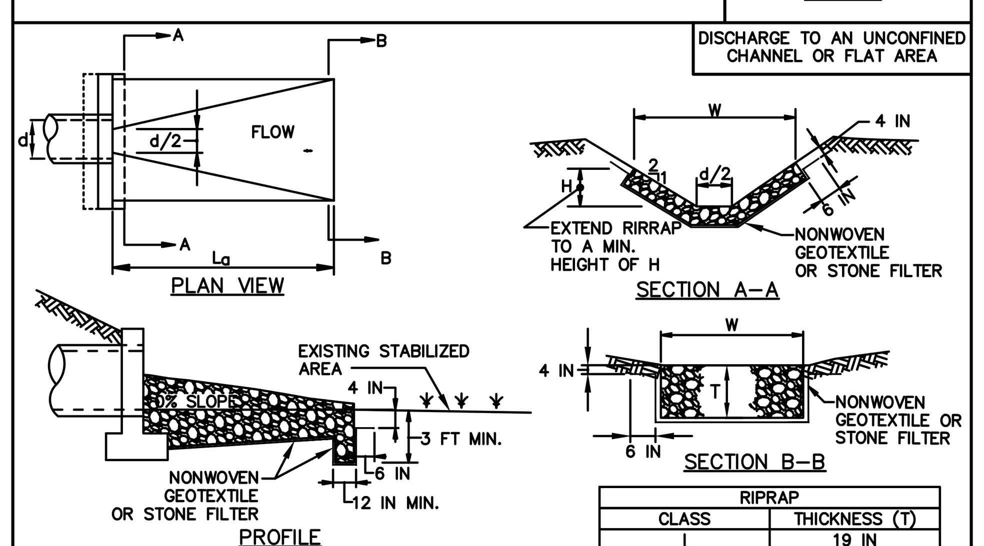

RIPRAP	
CLASS	THICKNESS (T)
I	19 IN
II	32 IN
III	46 IN

CONSTRUCTION SPECIFICATIONS

1. RIPRAP AND STONE MUST CONFORM TO THE SPECIFIED CLASS.
2. USE NONWOVEN GEOTEXTILE, AS SPECIFIED IN SECTION H–1 MATERIALS, AND PROTECT FROM PUNCTURING, CUTTING, OR TEARING. REPAIR ANY DAMAGE OTHER THAN AN OCCASIONAL SMALL HOLE BY PLACING ANOTHER PIECE OF GEOTEXTILE OVER THE DAMAGED PART OR BY COMPLETELY REPLACING THE GEOTEXTILE. PROVIDE A MINIMUM OF ONE FOOT OVERLAP FOR ALL REPAIRS AND FOR JOINING TWO PIECES OF GEOTEXTILE TOGETHER.
3. PREPARE THE SUBGRADE FOR GEOTEXTILE OR STONE FILTER (⅜ TO 1½ INCH MINIMUM STONE FOR 6 INCH MINIMUM DEPTH) AND RIPRAP TO THE REQUIRED LINES AND GRADES. COMPACT ANY FILL REQUIRED IN THE SUBGRADE TO A DENSITY OF APPROXIMATELY THAT OF THE SURROUNDING UNDISTURBED MATERIAL.
4. EXTEND GEOTEXTILE AT LEAST 6 INCHES BEYOND EDGES OF RIPRAP AND EMBED AT LEAST 4 INCHES AT SIDES OF RIPRAP.
5. CONSTRUCT RIPRAP OUTLET TO FULL COURSE THICKNESS IN ONE OPERATION AND IN SUCH A MANNER AS TO AVOID DISPLACEMENT OF UNDERLYING MATERIALS. PLACE STONE FOR RIPRAP OUTLET IN A MANNER THAT WILL ENSURE THAT IT IS REASONABLY HOMOGENOUS WITH THE SMALLER STONES AND SPALLS FILLING THE VOIDS BETWEEN THE LARGER STONES. PLACE RIPRAP IN A MANNER TO PREVENT DAMAGE TO THE FILTER BLANKET OR GEOTEXTILE. HAND PLACE TO THE EXTENT NECESSARY.
6. WHERE NO ENDWALL IS USED, CONSTRUCT THE UPSTREAM END OF THE APRON SO THAT THE WIDTH IS TWO TIMES THE DIAMETER OF THE OUTLET PIPE, AND EXTEND THE STONE UNDER THE OUTLET BY A MINIMUM OF 18 INCHES.
7. CONSTRUCT APRON WITH 0% SLOPE ALONG ITS LENGTH AND WITHOUT OBSTRUCTIONS. PLACE STONE SO THAT IT BLENDS IN WITH EXISTING GROUND.
8. MAINTAIN LINE, GRADE, AND CROSS SECTION. KEEP OUTLET FREE OF EROSION. REMOVE ACCUMULATED SEDIMENT AND DEBRIS. AFTER HIGH FLOWS INSPECT FOR SCOUR AND RIPRAP DISLODGED RIPRAP. MAKE NECESSARY REPAIRS IMMEDIATELY.

MARYLAND STANDARDS AND SPECIFICATIONS FOR SOIL EROSION AND SEDIMENT CONTROL

U.S. DEPARTMENT OF AGRICULTURE NATURAL RESOURCES CONSERVATION SERVICE	2011	MARYLAND DEPARTMENT OF ENVIRONMENT WATER MANAGEMENT ADMINISTRATION

ALL DIMENSIONS AND EXISTING CONDITIONS SHALL BE CHECKED AND VERIFIED BY THE CONTRACTOR AT THE SITE.

RKK21\SYS – \\ad.rkk.com\fs\Cloud\Projects\2019\19082_CreameryPS\Cadd\Plans\Civil\19082CR-014-CP-SC1.dwg Jan 27, 2023 – 8:52am Plot Scale 1:1

FREDERICK SOIL CONSERVATION DISTRICT
SOIL EROSION AND SEDIMENT CONTROL PLAN APPROVAL

BY: Steve Leathem

DATE: 5-10-22

SCD APPROVAL FOR SEDIMENT AND EROSION CONTROL IS CONTINGENT UPON ISSUANCE OF ALL APPLICABLE REGULATORY PERMITS.

01/25/2023

PROFESSIONAL CERTIFICATION

I HEREBY CERTIFY THAT THESE DOCUMENTS WERE PREPARED OR APPROVED BY ME, AND THAT I AM A DULY LICENSED PROFESSIONAL ENGINEER UNDER THE LAWS OF THE STATE OF MARYLAND.
LICENSE NO. 22765 EXPIRATION DATE 07/09/2024

RK&K
700 EAST PRATT STREET, SUITE 500
BALTIMORE, MARYLAND 21202
800.787.3755

NO.	DESCRIPTION	BY	DATE

REVISIONS

TOWN OF EMMITSBURG, MARYLAND
NEW CREAMERY ROAD SEWAGE PUMP STATION
EMMITSBURG, MARYLAND

GRADING AND SEDIMENT CONTROL DETAILS

ENGINEER	CHECKED BY
JSG	RAL
DRAWN BY	DATE
JAB	1/2023

RK&K PROJECT NUMBER 19082

DRAWING NUMBER SC4

Division of Planning and Permitting
Department of Development
Review Engineering

APPROVED: 06/01/22

Signature:

NOTES:

1. ALL EXISTING FEATURES DENOTED BY SLANTED TEXT.
2. PROVIDE TEMPORARY POWER TO THE EXISTING PUMPING STATION TO PERMIT CONSTRUCTION.
3. SEE DRAWING C1 FOR EXISTING FEATURES TO BE REMOVED.
4. NO EXCAVATED MATERIAL SHALL BE STOCKPILED ON-SITE FOR LONGER THAN ONE DAY. ALL EXCAVATED MATERIAL SHALL BE HAULED OFF-SITE FOR DISPOSAL OR STORAGE TO A SITE WITH AN OPEN GRADING PERMIT AND APPROVED SEDIMENT CONTROL PLAN.
5. THE 100-YEAR FLOODPLAIN IS DELINEATED FROM FEMA'S NATIONAL FLOOD HAZARD LAYER DATASET, MAP PANEL 24021C0055D EFFECTIVE NOVEMBER 19, 2007.
6. THE NATIONAL WETLANDS INVENTORY MAPS INDICATE THAT THERE ARE NO WETLANDS WITHIN THE PROPOSED LIMIT OF DISTURBANCE.
7. EXISTING IMPERVIOUS AREA = 5,715 SF (0.131 AC.).

EROSION AND SEDIMENT CONTROL NOTES:

1. ALL EROSION AND SEDIMENT CONTROL MEASURES SHALL BE INSTALLED AND MAINTAINED IN CONTINUOUS COMPLIANCE WITH THE LATEST VERSION OF THE 2011 MARYLAND STANDARDS AND SPECIFICATIONS FOR SOIL EROSION AND SEDIMENT CONTROL.
2. ALL UTILITIES, SUCH AS STORM DRAIN, PUBLIC WATER, SANITARY SEWER, ELECTRICAL POWER, TELEPHONE CABLE AND GAS LINES THAT ARE NOT IN PAVED AREAS AND ARE NOT UNDERGOING ACTIVE GRADING SHALL BE TEMPORARILY OR PERMANENTLY STABILIZED WITHIN 3 DAYS OF INITIAL DISTURBANCE.
3. THE OWNER/DEVELOPER OR THEIR DESIGNATE IS RESPONSIBLE FOR CONDUCTING ROUTINE INSPECTIONS AND REQUIRED MAINTENANCE. THE SITE AND CONTROLS SHOULD BE INSPECTED WEEKLY AND THE NEXT DAY AFTER EACH RAIN EVENT. ANY ACCUMULATED SEDIMENT SHALL BE REMOVED AND DISPOSED OF IN A SUITABLE AREA AND SHALL BE TEMPORARILY OR PERMANENTLY STABILIZED.

STANDARD STABILIZATION NOTES:

1. FOLLOWING INITIAL SOIL DISTURBANCE OR RE-DISTRIBUTION, PERMANENT OR TEMPORARY STABILIZATION MUST BE COMPLETED WITHIN:
   A. THREE (3) CALENDAR DAYS AS TO THE SURFACE OF ALL PERIMETER DIKES, SWALES, DITCHES, PERIMETER SLOPES, AND ALL SLOPES STEEPER THAN 3 HORIZONTAL TO 1 VERTICAL (3:1); AND
   B. SEVEN (7) CALENDAR DAYS AS TO ALL OTHER DISTURBED OR GRADED AREAS ON PROJECT SITE NOT UNDER ACTIVE GRADING.

FOR UTILITY WORK ONLY OR FOR OFF-SITE UTILITY WORK:

1. PLACE ALL EXCAVATED MATERIAL ON HIGH SIDE OF TRENCH.
2. ONLY DO AS MUCH WORK AS CAN BE DONE IN ONE DAY SO BACKFILLING, FINAL GRADING, SEEDING AND MULCHING CAN OCCUR.
3. ANY SEDIMENT CONTROL MEASURES DISTURBED BY CONSTRUCTION WILL BE REPAIRED THE SAME DAY.

STOCKPILE NOTES:

1. NO STOCKPILING ALLOWED ON ASPHALT.
2. ALL STOCKPILES LEFT AT THE END OF THE DAY NEED TO BE STABILIZED UNTIL THE NEXT REDISTURBANCE.

REVISED UTILITY NOTE FOR SECONDARY UTILITY WORK:

1. ALL DISTURBANCES FROM SECONDARY UTILITIES SUCH AS PHONE CABLE, ELECTRIC CABLE, TV CABLE, ETC. WILL BE THE CONTRACTOR'S RESPONSIBILITY TO BRING WORK AREA BACK TO GRADE LEVEL THAT WAS EXISTING AND SEED AND MULCH ANY DISTURBANCE FROM INSTALLATION OF LINES OR CONDUIT.
2. CONTRACTOR WILL BE RESPONSIBLE FOR RE-INSTALLING OR REPAIRING ANY SILT FENCE OR SEDIMENT CONTROLS THAT WERE EXISTING TO MAINTAIN PROPER SEDIMENT CONTROL THAT MIGHT HAVE BEEN DAMAGED.

TRAVERSE COORDINATES				
TRAV	NORTHING	EASTING	ELEVATION	DESCRIPTION
1	740,694.79	1,222,318.52	387.16'	REBAR
6	740,706.88	1,222,457.15	386.07'	REBAR
113	740,386.95	1,222,631.98	397.77'	REBAR
184	740,683.24	1,222,319.08	387.40'	TOP OF BOLT
258	740,508.62	1,222,586.25	394.27'	TRAV
270	740,582.20	1,222,556.87	382.66'	TRAV

PROPERTY CORNER COORDINATES		
PT	NORTHING	EASTING
8	740,765.30	1,222,417.07
401	740,756.80	1,222,422.35
402	740,618.96	1,222,531.44
403	740,492.74	1,222,672.12
502	740,710.89	1,222,329.52
503	740,434.26	1,222,633.68
504	740,702.40	1,222,334.80

ALL DIMENSIONS AND EXISTING CONDITIONS SHALL BE CHECKED AND VERIFIED BY THE CONTRACTOR AT THE SITE.

FREDERICK SOIL CONSERVATION DISTRICT
SOIL EROSION AND SEDIMENT CONTROL PLAN APPROVAL

BY: Steve Scarborough

DATE: 5-10-22

SCD APPROVAL FOR SEDIMENT AND EROSION CONTROL IS CONTINGENT UPON ISSUANCE OF ALL APPLICABLE REGULATORY PERMITS.

HORIZONTAL AND VERTICAL COORDINATES				
PT	NORTHING	EASTING	ELEVATION	DESCRIPTION
1020	740,636.78	1,222,428.38	389.51	EOP/LOD
1021	740,631.20	1,222,428.64	389.64	EOP/LOD
1028	740,590.91	1,222,476.14	–	LOD
1029	740,606.22	1,222,458.47	–	LOD
1030	740,578.29	1,222,431.90	–	LOD
1031	740,579.59	1,222,430.36	–	LOD
1032	740,607.57	1,222,456.99	–	LOD
1033	740,630.26	1,222,432.13	–	LOD
1034	740,656.44	1,222,403.29	–	LOD
1035	740,715.83	1,222,338.88	–	LOD
1036	740,738.57	1,222,375.23	–	LOD
1037	740,769.94	1,222,356.63	–	LOD
1038	740,775.04	1,222,365.23	–	LOD
1039	740,743.92	1,222,383.69	–	LOD
1040	740,764.67	1,222,416.50	–	LOD
1041	740,732.58	1,222,433.64	–	LOD
1042	740,642.37	1,222,501.00	–	LOD
1043	740,626.41	1,222,507.48	–	LOD

SITE DEMOLITION PLAN
SCALE: 1"=10'

NORTH

1"=10'

PROFESSIONAL CERTIFICATION
I HEREBY CERTIFY THAT THESE DOCUMENTS WERE PREPARED OR APPROVED BY ME, AND THAT I AM A DULY LICENSED PROFESSIONAL ENGINEER UNDER THE LAWS OF THE STATE OF MARYLAND.
LICENSE NO. 22765
EXPIRATION DATE 07/09/2024

RK&K
700 EAST PRATT STREET, SUITE 500
BALTIMORE, MARYLAND 21202
800.787.3765

NO.	DESCRIPTION	BY	DATE
	REVISIONS		

TOWN OF EMMITSBURG, MARYLAND
NEW CREAMERY ROAD SEWAGE PUMP STATION
EMMITSBURG, MARYLAND

GRADING AND SEDIMENT CONTROL PLANS - EXISTING SITE

ENGINEER	CHECKED BY
JSG	RAL
DRAWN BY	DATE
JAB	1/2023
RK&K PROJECT NUMBER	
19082	

DRAWING NUMBER
SC5
SHEET NO. 18 OF 60

01/25/2023

RK&K\SYS - \\rkk4k.com\VA\Cloud\Projects\20191\19082_Creamery\PS\Cloud\Plans\Civil\190825R-004-CP-C1-SC7.dwg Jan 27, 2023 - 8:56am Plot Scale: 1:1

Division of Planning and Permitting
Department of Development
Review Engineering

APPROVED: 06/08/2

Signature:

NOTES:

1. TOTAL AREA WITHIN LIMIT OF DISTURBANCE = 12,520 SF (0.287 AC.)
   - AREA OF EXISTING STRUCTURES = 30 SF (0.001 AC.)
   - AREA OF STAGING AREA = 5,595 SF (0.128 AC.)

   TOTAL DISTURBED AREA = 6,895 SF (0.160 AC.)
   - AREA OF NEW STRUCTURES = 300 SF (0.007 AC.)
   - AREA OF NEW BUILDING = 1,280 SF (0.029 AC.)
   - AREA OF NEW PAVEMENT = 4,100 SF (0.094 AC.)
   - AREA OF NEW GRASS = 1,215 SF (0.028 AC.)

2. TOTAL IMPERVIOUS AREA = 5,710 (0.131 AC.).
   EXISTING IMPERVIOUS AREA = 30 SF (0.001 AC.).
   PROPOSED IMPERVIOUS AREA = 5,680 SF (0.130 AC.)

3. NO EXCAVATED MATERIAL SHALL BE STOCKPILED ON-SITE FOR LONGER THAN ONE DAY. ALL EXCAVATED MATERIAL SHALL BE HAULED OFF-SITE FOR DISPOSAL OR STORAGE TO A SITE WITH AN OPEN GRADING PERMIT AND APPROVED SEDIMENT CONTROL PLAN.

4. THE 100-YEAR FLOODPLAIN IS DELINEATED FROM FEMA'S NATIONAL FLOOD HAZARD LAYER DATASET MAP PANEL 24021C0055D, EFFECTIVE NOVEMBER 19, 2007. THE 100-YEAR FLOODPLAIN ELEVATION IS 386.7.

5. THE NATIONAL WETLANDS INVENTORY MAPS INDICATE THAT THERE ARE NO WETLANDS WITHIN THE PROPOSED LIMIT OF DISTURBANCE.

EROSION AND SEDIMENT CONTROL NOTES:

1. ALL EROSION AND SEDIMENT CONTROL MEASURES SHALL BE INSTALLED AND MAINTAINED IN CONTINUOUS COMPLIANCE WITH THE LATEST VERSION OF THE 2011 MARYLAND STANDARDS AND SPECIFICATIONS FOR SOIL EROSION AND SEDIMENT CONTROL.

2. ALL UTILITIES, SUCH AS STORM DRAIN, PUBLIC WATER, SANITARY SEWER, ELECTRICAL POWER, TELEPHONE CABLE AND GAS LINES THAT ARE NOT IN PAVED AREAS AND ARE NOT UNDERGOING ACTIVE GRADING SHALL BE TEMPORARILY OR PERMANENTLY STABILIZED WITHIN 3 DAYS OF INITIAL DISTURBANCE.

3. THE OWNER/DEVELOPER OR THEIR DESIGNATE IS RESPONSIBLE FOR CONDUCTING ROUTINE INSPECTIONS AND REQUIRED MAINTENANCE. THE SITE AND CONTROLS SHOULD BE INSPECTED WEEKLY AND THE NEXT DAY AFTER EACH RAIN EVENT.

** ANY ACCUMULATED SEDIMENT SHALL BE REMOVED AND DISPOSED OF IN A SUITABLE AREA AND SHALL BE TEMPORARILY OR PERMANENTLY STABILIZED.

STANDARD STABILIZATION NOTES:

1. FOLLOWING INITIAL SOIL DISTURBANCE OR RE-DISTRIBUTION, PERMANENT OR TEMPORARY STABILIZATION MUST BE COMPLETED WITHIN:
   A. THREE (3) CALENDAR DAYS AS TO THE SURFACE OF ALL PERIMETER DIKES, SWALES, DITCHES, PERIMETER SLOPES, AND ALL SLOPES STEEPER THAN 3 HORIZONTAL TO 1 VERTICAL (3:1); AND
   B. SEVEN (7) CALENDAR DAYS AS TO ALL OTHER DISTURBED OR GRADED AREAS ON PROJECT SITE NOT UNDER ACTIVE GRADING.

FOR UTILITY WORK ONLY OR FOR OFF-SITE UTILITY WORK:

1. PLACE ALL EXCAVATED MATERIAL ON HIGH SIDE OF TRENCH.

2. ONLY DO AS MUCH WORK AS CAN BE DONE IN ONE DAY SO BACKFILLING, FINAL GRADING, SEEDING AND MULCHING CAN OCCUR..

3. ANY SEDIMENT CONTROL MEASURES DISTURBED BY CONSTRUCTION WILL BE REPAIRED THE SAME DAY.

STOCKPILE NOTES;

1. NO STOCKPILING ALLOWED ON ASPHALT.

2. ALL STOCKPILES LEFT AT THE END OF THE DAY NEED TO BE STABILIZED UNTIL THE NEXT REDISTURBANCE.

REVISED UTILITY NOTE FOR SECONDARY UTILITY WORK:

1. ALL DISTURBANCES FROM SECONDARY UTILITIES SUCH AS PHONE CABLE, ELECTRIC CABLE, TV CABLE, ETC. WILL BE THE CONTRACTOR'S RESPONSIBILITY TO BRING WORK AREA BACK TO GRADE LEVEL THAT WAS EXISTING AND SEED AND MULCH ANY DISTURBANCE FROM INSTALLATION OF LINES OR CONDUIT.

2. CONTRACTOR WILL BE RESPONSIBLE FOR RE-INSTALLING OR REPAIRING ANY SILT FENCE OR SEDIMENT CONTROLS THAT WERE EXISTING TO MAINTAIN PROPER SEDIMENT CONTROL THAT MIGHT HAVE BEEN DAMAGED.

SEQUENCE OF OPERATIONS:

1. NOTIFY FREDERICK COUNTY DIVISION OF PLANNING AND PERMITTING 301-600-3507 AT LEAST 48 HOURS PRIOR TO BEGINNING WORK. NOTIFY THE MARYLAND DEPARTMENT OF THE ENVIRONMENT, INSPECTION AND COMPLIANCE PROGRAM, (410) 537-3510 AT LEAST 5 DAYS PRIOR TO BEGINNING WORK.

2. IF APPLICABLE, ORANGE HIGH VISIBILITY FENCE SHALL BE MANUALLY INSTALLED ALONG THE LIMIT OF DISTURBANCE, WHERE THE LIMIT IS WITHIN 50 FEET OF THE FOREST BUFFER/CONSERVATION EASEMENT. THIS SHALL BE COMPLETED BY AND INSPECTED AT THE PRE-CONSTRUCTION MEETING.

3. STOCKPILING OF MATERIAL AND A CONCRETE WASHOUT AREA SHALL BE DISCUSSED WITH THE SEDIMENT CONTROL INSPECTOR DURING THE PRE-CONSTRUCTION MEETING.

4. CLEAR AND GRUB (INCLUDING REMOVAL OF EXISTING PAVING) TO ALLOW FOR INSTALLATION OF EROSION & SEDIMENT CONTROL MEASURES OR DEVICES.

5. INSTALL ALL EROSION & SEDIMENT CONTROL MEASURES AND DEVICES IN ACCORDANCE WITH DRAWINGS SC5 AND SC6. IF NECESSARY TO ENSURE PRACTICAL USAGE, ADJUSTMENTS CAN BE MADE TO THE SCE WITH COORDINATION WITH THE SC INSPECTOR.

6. NOTIFY FREDERICK COUNTY DIVISION OF PLANNING AND PERMITTING UPON COMPLETION OF SAID INSTALLATION.

7. WITH APPROVAL OF FREDERICK COUNTY DIVISION OF PLANNING AND PERMITTING AND THE SEDIMENT CONTROL INSPECTOR, CLEAR AND GRUB REMAINDER OF SITE.

8. EXCAVATE AND REMOVE EXISTING FORCE MAIN PIPING IN ACCORDANCE WITH DRAWING C1.

9. IMMEDIATELY REMOVE STONE AND/OR SEDIMENT SPILLED, DROPPED, OR TRACKED ONTO ADJACENT ROADWAY BY VACUUMING, SCRAPING, AND/OR SWEEPING. WASHING ROADWAY TO REMOVE MUD TRACKED ONTO PAVEMENT IS NOT ACCEPTABLE UNLESS WASH WATER IS DIRECTED TO AN APPROVED SEDIMENT CONTROL PRACTICE.

10. COORDINATE ALL UTILITY DEMOLITION AND CONSTRUCTION WITH APPROPRIATE AGENCIES.

11. EXCAVATE FOR INSTALLATION OF GENERATOR PAD, INFLUENT MANHOLE, WETWELL, PUMP STATION, VALVE VAULT, BIORETENTION FACILITY, DRYWELL AND FORCE MAIN PIPING IN ACCORDANCE WITH DRAWINGS C2-C4 AND SWM1-SWM3. INSTALL SUPPORT OF EXCAVATION DEVICES AND DEWATER EXCAVATION AS NECESSARY. BLASTING IS NOT PERMITTED UNDER ANY CIRCUMSTANCES FOR EXCAVATION.

12. INSTALL NEW GENERATOR PAD, INFLUENT MANHOLE, WETWELL, PUMP STATION, VALVE VAULT, BIORETENTION FACILITY, DRYWELL AND ASSOCIATED PIPING, ELECTRICAL DUCTBANKS, BOLLARDS AND FENCING AND RE-GRADE AREA WITHIN THE LOD, AS SHOWN, TO PROVIDE ADEQUATE DRAINAGE OF THE SITE.

13. AS SITE WORK IS COMPLETED, STABILIZE ACCORDINGLY (STONE SUBBASE, ASPHALT PAVING, VEGETABLE STABILIZATION, ETC.), REFER TO DRAWING C2 FOR LIMITS OF NEW PAVEMENT.

14. INSTALL NEW BIORETENTION FACILITY, AS SHOWN.

15. UPON STABILIZATION OF THE SITE WITH ESTABLISHED VEGETATION AND WITH PERMISSION OF THE SEDIMENT CONTROL INSPECTOR, REMOVE SEDIMENT CONTROL MEASURES AND STABILIZE THOSE AREAS DISTURBED BY THIS PROCESS.

ALL DIMENSIONS AND EXISTING CONDITIONS
SHALL BE CHECKED AND VERIFIED BY THE CONTRACTOR AT THE SITE.

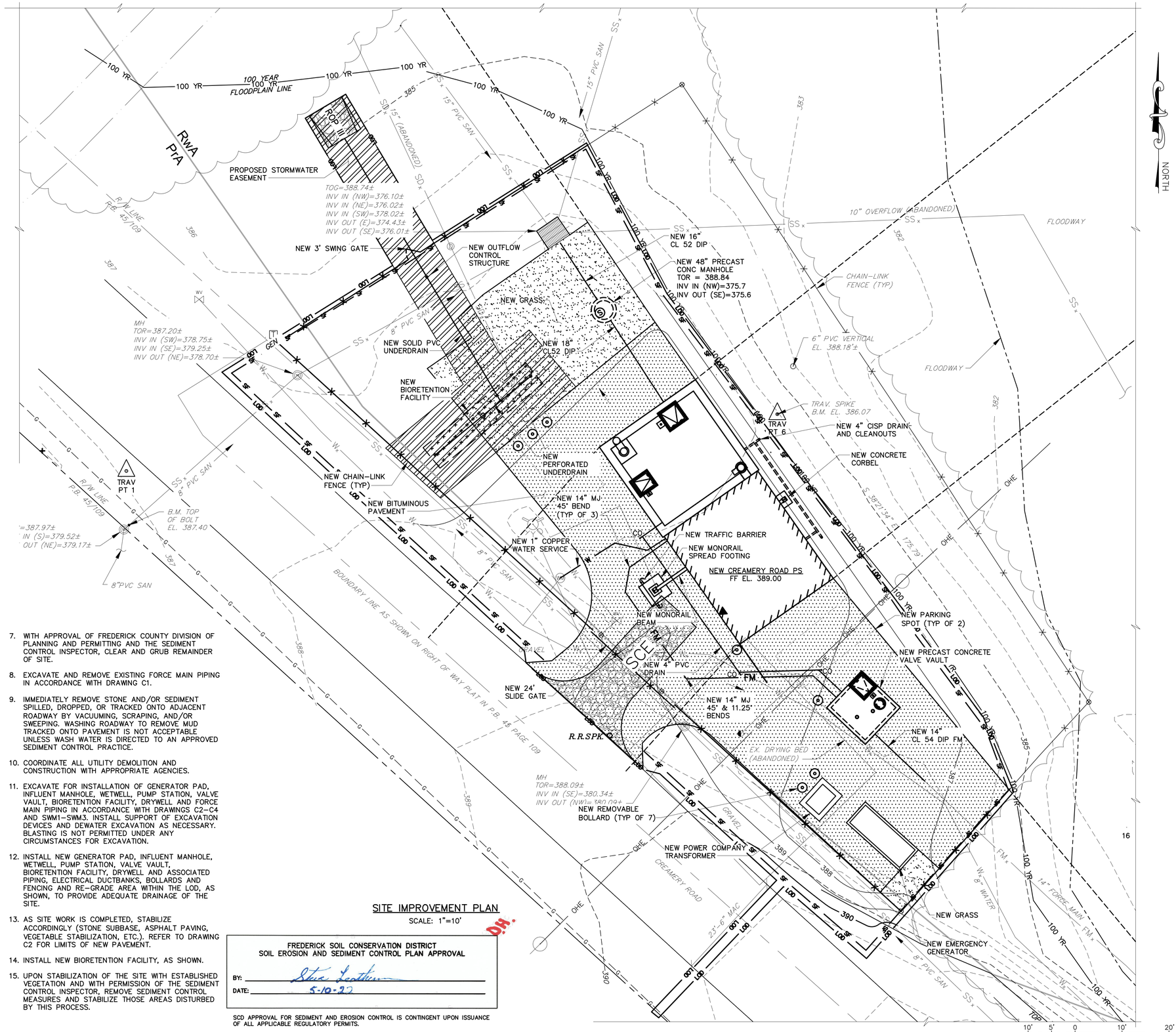

SITE IMPROVEMENT PLAN
SCALE: 1"=10'

FREDERICK SOIL CONSERVATION DISTRICT
SOIL EROSION AND SEDIMENT CONTROL PLAN APPROVAL

BY: Steve Scatterday
DATE: 5-10-22

SCD APPROVAL FOR SEDIMENT AND EROSION CONTROL IS CONTINGENT UPON ISSUANCE OF ALL APPLICABLE REGULATORY PERMITS.

PROFESSIONAL CERTIFICATION

I HEREBY CERTIFY THAT THESE DOCUMENTS WERE PREPARED OR APPROVED BY ME, AND THAT I AM A DULY LICENSED PROFESSIONAL ENGINEER UNDER THE LAWS OF THE STATE OF MARYLAND.
LICENSE NO. 22765
EXPIRATION DATE 07/09/2024

MARK A. SCHULTZ — STATE OF MARYLAND — 22765 — PROFESSIONAL ENGINEER
01/25/2023

RK&K
700 EAST PRATT STREET, SUITE 500
BALTIMORE, MARYLAND 21202
800.787.3755

NO.	DESCRIPTION	BY	DATE
	REVISIONS		

TOWN OF EMMITSBURG, MARYLAND
NEW CREAMERY ROAD SEWAGE PUMP STATION
EMMITSBURG, MARYLAND

GRADING AND SEDIMENT CONTROL PLAN - PROPOSED SITE

ENGINEER	CHECKED BY
JSG	RAL
DRAWN BY	DATE
JAB	1/2023
RK&K PROJECT NUMBER	
19082	

DRAWING NUMBER
SC6
SHEET NO. 19 OF 60

RK&K\21\SYS - \\cad.rkk.com\VA\Cloud\Projects\20191\19082_Creamery\PS\Cad\Plans\Cut\19082PS-004-CP-C1-SC7.dwg Jan 27, 2023 - 8:57am Plot Scale: 1:1

Division of Planning and Permitting
Department of Development
Review Engineering

APPROVED: 06/08/23

Signature:

NOTES:

1. TOTAL AREA WITHIN LIMIT OF DISTURBANCE = 12,520 SF (0.287 AC.)
   - AREA OF EXISTING STRUCTURES = 30 SF (0.28 AC.)
   - AREA OF STAGING AREA = 5,595 SF (0.128 AC.)

   TOTAL DISTURBED AREA = 6,895 SF (0.160 AC.)
   - AREA OF NEW STRUCTURES = 300 SF (0.007 AC.)
   - AREA OF NEW BUILDING = 1,280 SF (0.029 AC.)
   - AREA OF NEW PAVEMENT = 4,100 SF (0.094 AC.)
   - AREA OF NEW GRASS = 1,215 SF (0.028 AC.)

2. TOTAL IMPERVIOUS AREA = 5,710 (0.131 AC.).
   EXISTING IMPERVIOUS AREA = 30 SF (0.001 AC.).
   PROPOSED IMPERVIOUS AREA = 5,680 SF (0.130 AC.)

3. NO EXCAVATED MATERIAL SHALL BE STOCKPILED ON-SITE FOR LONGER THAN ONE DAY. ALL EXCAVATED MATERIAL SHALL BE HAULED OFF-SITE FOR DISPOSAL OR STORAGE TO A SITE WITH AN OPEN GRADING PERMIT AND APPROVED SEDIMENT CONTROL PLAN.

4. THE 100-YEAR FLOODPLAIN IS DELINEATED FROM FEMA'S NATIONAL FLOOD HAZARD LAYER DATASET MAP PANEL 24021C0055D, EFFECTIVE NOVEMBER 19, 2007. THE 100-YEAR FLOODPLAIN ELEVATION IS 386.7.

EROSION AND SEDIMENT CONTROL NOTES:

1. ALL EROSION AND SEDIMENT CONTROL MEASURES SHALL BE INSTALLED AND MAINTAINED IN CONTINUOUS COMPLIANCE WITH THE LATEST VERSION OF THE 2011 MARYLAND STANDARDS AND SPECIFICATIONS FOR SOIL EROSION AND SEDIMENT CONTROL.

2. ALL UTILITIES, SUCH AS STORM DRAIN, PUBLIC WATER, SANITARY SEWER, ELECTRICAL POWER, TELEPHONE CABLE AND GAS LINES THAT ARE NOT IN PAVED AREAS AND ARE NOT UNDERGOING ACTIVE GRADING SHALL BE TEMPORARILY OR PERMANENTLY STABILIZED WITHIN 3 DAYS OF INITIAL DISTURBANCE.

3. THE OWNER/DEVELOPER OR THEIR DESIGNATE IS RESPONSIBLE FOR CONDUCTING ROUTINE INSPECTIONS AND REQUIRED MAINTENANCE. THE SITE AND CONTROLS SHOULD BE INSPECTED WEEKLY AND THE NEXT DAY AFTER EACH RAIN EVENT.

** ANY ACCUMULATED SEDIMENT SHALL BE REMOVED AND DISPOSED OF IN A SUITABLE AREA AND SHALL BE TEMPORARILY OR PERMANENTLY STABILIZED.

STANDARD STABILIZATION NOTES:

1. FOLLOWING INITIAL SOIL DISTURBANCE OR RE-DISTRIBUTION, PERMANENT OR TEMPORARY STABILIZATION MUST BE COMPLETED WITHIN:
   A. THREE (3) CALENDAR DAYS AS TO THE SURFACE OF ALL PERIMETER DIKES, SWALES, DITCHES, PERIMETER SLOPES, AND ALL SLOPES STEEPER THAN 3 HORIZONTAL TO 1 VERTICAL (3:1); AND
   B. SEVEN (7) CALENDAR DAYS AS TO ALL OTHER DISTURBED OR GRADED AREAS ON PROJECT SITE NOT UNDER ACTIVE GRADING.

FOR UTILITY WORK ONLY OR FOR OFF-SITE UTILITY WORK:

1. PLACE ALL EXCAVATED MATERIAL ON HIGH SIDE OF TRENCH.

2. ONLY DO AS MUCH WORK AS CAN BE DONE IN ONE DAY SO BACKFILLING, FINAL GRADING, SEEDING AND MULCHING CAN OCCUR..

3. ANY SEDIMENT CONTROL MEASURES DISTURBED BY CONSTRUCTION WILL BE REPAIRED THE SAME DAY.

STOCKPILE NOTES:

1. NO STOCKPILING ALLOWED ON ASPHALT.

2. ALL STOCKPILES LEFT AT THE END OF THE DAY NEED TO BE STABILIZED UNTIL THE NEXT REDISTURBANCE.

REVISED UTILITY NOTE FOR SECONDARY UTILITY WORK:

1. ALL DISTURBANCES FROM SECONDARY UTILITIES SUCH AS PHONE CABLE, ELECTRIC CABLE, TV CABLE, ETC. WILL BE THE CONTRACTOR'S RESPONSIBILITY TO BRING WORK AREA BACK TO GRADE LEVEL THAT WAS EXISTING AND SEED AND MULCH ANY DISTURBANCE FROM INSTALLATION OF LINES OR CONDUIT.

2. CONTRACTOR WILL BE RESPONSIBLE FOR RE-INSTALLING OR REPAIRING ANY SILT FENCE OR SEDIMENT CONTROLS THAT WERE EXISTING TO MAINTAIN PROPER SEDIMENT CONTROL THAT MIGHT HAVE BEEN DAMAGED.

SEQUENCE OF OPERATIONS:

1. NOTIFY FREDERICK COUNTY DIVISION OF PLANNING AND PERMITTING 301-600-3507 AT LEAST 48 HOURS PRIOR TO BEGINNING WORK. NOTIFY THE MARYLAND DEPARTMENT OF THE ENVIRONMENT, INSPECTION AND COMPLIANCE PROGRAM, (410) 537-3510 AT LEAST 5 DAYS PRIOR TO BEGINNING WORK.

2. IF APPLICABLE, ORANGE HIGH VISIBILITY FENCE SHALL BE MANUALLY INSTALLED ALONG THE LIMIT OF DISTURBANCE, WHERE THE LIMIT IS WITHIN 50 FEET OF THE FOREST BUFFER/CONSERVATION EASEMENT. THIS SHALL BE COMPLETED BY AND INSPECTED AT THE PRE-CONSTRUCTION MEETING.

3. STOCKPILING OF MATERIAL AND A CONCRETE WASHOUT AREA SHALL BE DISCUSSED WITH THE SEDIMENT CONTROL INSPECTOR DURING THE PRE-CONSTRUCTION MEETING.

4. CLEAR AND GRUB (INCLUDING REMOVAL OF EXISTING PAVING) TO ALLOW FOR INSTALLATION OF EROSION & SEDIMENT CONTROL MEASURES OR DEVICES.

5. INSTALL ALL EROSION & SEDIMENT CONTROL MEASURES AND DEVICES IN ACCORDANCE WITH DRAWINGS SC5 AND SC6. IF NECESSARY TO ENSURE PRACTICAL USAGE, ADJUSTMENTS CAN BE MADE TO THE SCE WITH COORDINATION WITH THE SC INSPECTOR.

6. NOTIFY FREDERICK COUNTY DIVISION OF PLANNING AND PERMITTING UPON COMPLETION OF SAID INSTALLATION.

ALL DIMENSIONS AND EXISTING CONDITIONS
SHALL BE CHECKED AND VERIFIED BY THE CONTRACTOR AT THE SITE.

LINE TABLE	
LINE	DISTANCE
L1	131.44'
L2	193.85'
L3	43.25'
L4	54.51'
L5	250.18'
L6	502.22'

PROPERTY CORNER COORDINATES		
PT	NORTHING	EASTING
8	740,765.30	1,222,417.07
401	740,756.80	1,222,422.35
402	740,618.96	1,222,531.44
403	740,492.74	1,222,672.12
502	740,710.89	1,222,329.52
503	740,434.26	1,222,633.68
504	740,702.40	1,222,334.80

FREDERICK SOIL CONSERVATION DISTRICT
SOIL EROSION AND SEDIMENT CONTROL PLAN APPROVAL

BY: Steve Leatherman

DATE: 5-10-22

SCD APPROVAL FOR SEDIMENT AND EROSION CONTROL IS CONTINGENT UPON ISSUANCE OF ALL APPLICABLE REGULATORY PERMITS.

7. WITH APPROVAL OF FREDERICK COUNTY DIVISION OF PLANNING AND PERMITTING AND THE SEDIMENT CONTROL INSPECTOR, CLEAR AND GRUB REMAINDER OF SITE.

8. EXCAVATE AND REMOVE EXISTING FORCE MAIN PIPING IN ACCORDANCE WITH DRAWING C1.

9. IMMEDIATELY REMOVE STONE AND/OR SEDIMENT SPILLED, DROPPED, OR TRACKED ONTO ADJACENT ROADWAY BY VACUUMING, SCRAPING, AND/OR SWEEPING. WASHING ROADWAY TO REMOVE MUD TRACKED ONTO PAVEMENT IS NOT ACCEPTABLE UNLESS WASH WATER IS DIRECTED TO AN APPROVED SEDIMENT CONTROL PRACTICE.

10. COORDINATE ALL UTILITY DEMOLITION AND CONSTRUCTION WITH APPROPRIATE AGENCIES.

11. EXCAVATE FOR INSTALLATION OF GENERATOR PAD, INFLUENT MANHOLE, WETWELL, PUMP STATION, VALVE VAULT, BIORETENTION FACILITY, DRYWELL AND FORCE MAIN PIPING IN ACCORDANCE WITH DRAWINGS C2-C4 AND SWM1-SWM3. INSTALL SUPPORT OF EXCAVATION DEVICES AND DEWATER EXCAVATION AS NECESSARY. BLASTING IS NOT PERMITTED UNDER ANY CIRCUMSTANCES FOR EXCAVATION.

12. INSTALL NEW GENERATOR PAD, INFLUENT MANHOLE, WETWELL, PUMP STATION, VALVE VAULT, BIORETENTION FACILITY, DRYWELL AND ASSOCIATED PIPING, ELECTRICAL DUCTBANKS, BOLLARDS AND FENCING AND RE-GRADE AREA WITHIN THE LOD, AS SHOWN, TO PROVIDE ADEQUATE DRAINAGE OF THE SITE.

13. AS SITE WORK IS COMPLETED, STABILIZE ACCORDINGLY (STONE SUBBASE, ASPHALT PAVING, VEGETABLE STABILIZATION, ETC.). REFER TO DRAWING C2 FOR LIMITS OF NEW PAVEMENT.

14. INSTALL NEW BIORETENTION FACILITY, AS SHOWN.

15. UPON STABILIZATION OF THE SITE WITH ESTABLISHED VEGETATION AND WITH PERMISSION OF THE SEDIMENT CONTROL INSPECTOR, REMOVE SEDIMENT CONTROL MEASURES AND STABILIZE THOSE AREAS DISTURBED BY THIS PROCESS.

HORIZONTAL AND VERTICAL COORDINATES				
PT	NORTHING	EASTING	ELEVATION	DESCRIPTION
1000	740,714.25	1,222,439.70	388.75/388.14	WETWELL COR/GR
1001	740,695.02	1,222,453.22	389.00/388.14	WETWELL COR/GR
1002	740,680.64	1,222,432.77	389.00/388.69	WETWELL COR/GR
1003	740,699.87	1,222,419.25	388.75/388.21	WETWELL COR/GR
1004	740,671.88	1,222,469.08	389.00/388.12	PRECAST BLG COR/GR
1005	740,657.89	1,222,449.17	389.00/388.66	PRECAST BLG COR/GR
1020	740,636.78	1,222,428.38	389.51	EOP/LOD
1021	740,631.20	1,222,428.64	389.64	EOP/LOD
1028	740,590.91	1,222,476.14	–	LOD
1029	740,606.22	1,222,458.47	–	LOD
1030	740,578.29	1,222,431.90	–	LOD
1031	740,579.59	1,222,430.36	–	LOD
1032	740,607.57	1,222,456.99	–	LOD
1033	740,630.26	1,222,432.13	–	LOD
1034	740,656.44	1,222,403.29	–	LOD
1035	740,715.83	1,222,338.88	–	LOD
1036	740,738.57	1,222,375.23	–	LOD
1037	740,769.94	1,222,356.63	–	LOD
1038	740,775.04	1,222,365.23	–	LOD
1039	740,743.92	1,222,383.69	–	LOD
1040	740,764.67	1,222,416.50	–	LOD
1041	740,732.58	1,222,433.64	–	LOD
1042	740,642.37	1,222,501.00	–	LOD
1043	740,626.41	1,222,507.48	–	LOD

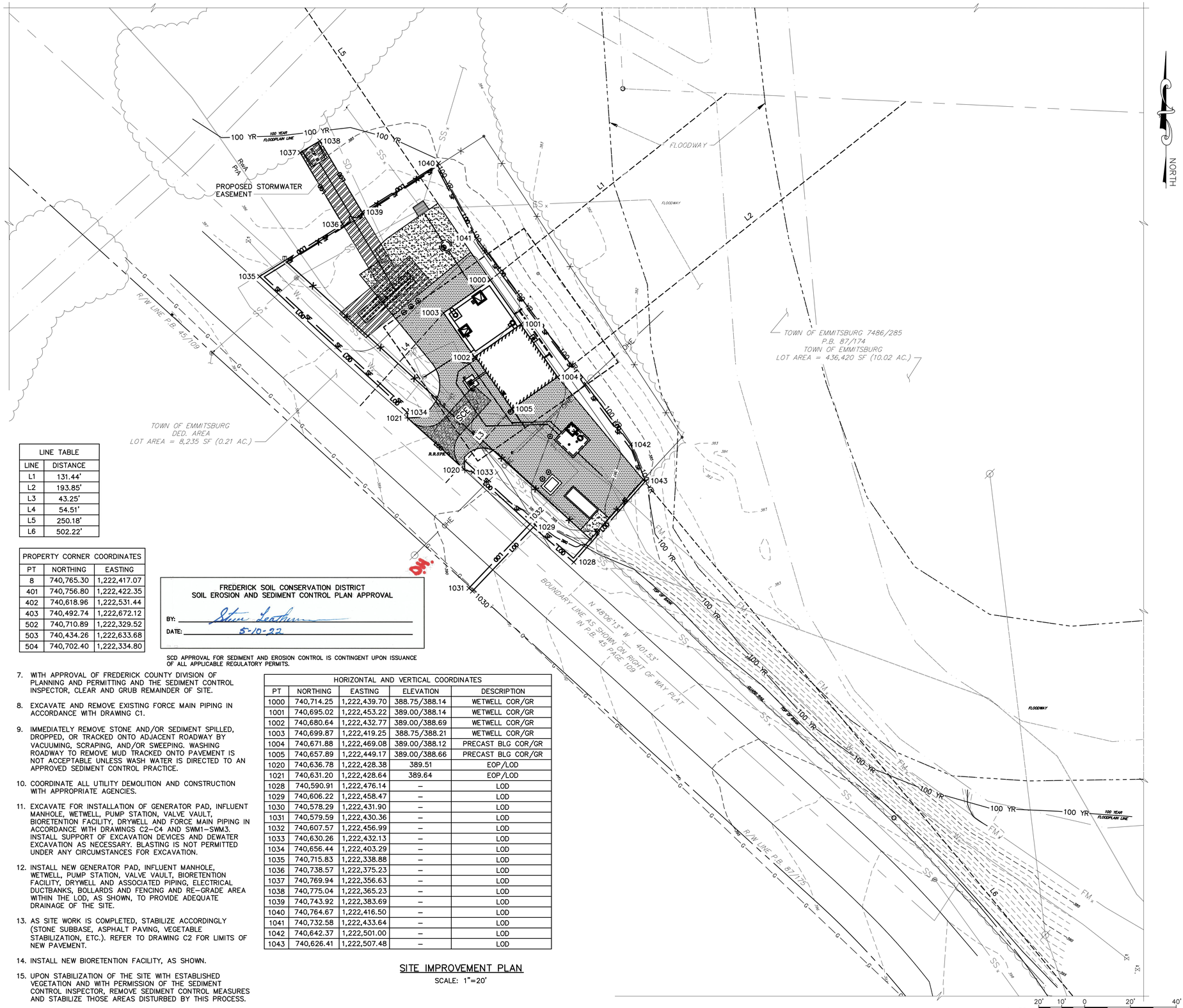

SITE IMPROVEMENT PLAN

SCALE: 1"=20'

NORTH

PROFESSIONAL CERTIFICATION

I HEREBY CERTIFY THAT THESE DOCUMENTS WERE PREPARED OR APPROVED BY ME, AND THAT I AM A DULY LICENSED PROFESSIONAL ENGINEER UNDER THE LAWS OF THE STATE OF MARYLAND.
LICENSE NO. 22765
EXPIRATION DATE 07/09/2024

RAMAR SOMPURA GUPTA — NOTARY PUBLIC — STATE OF MARYLAND — PROFESSIONAL ENGINEER
01/25/2023

RK&K
700 EAST PRATT STREET, SUITE 500
BALTIMORE, MARYLAND 21202
800.787.3765

NO.	DESCRIPTION	BY	DATE
	REVISIONS		

TOWN OF EMMITSBURG, MARYLAND
NEW CREAMERY ROAD SEWAGE PUMP STATION
EMMITSBURG, MARYLAND

OVERALL GRADING AND SEDIMENT CONTROL PLAN - PROPOSED SITE

ENGINEER	CHECKED BY
JSG	RAL
DRAWN BY	DATE
JAB	1/2023
RK&K PROJECT NUMBER	
19082	

DRAWING NUMBER
SC7

SHEET NO. 20 OF 60

RK#211.SYS – \\adt.rkk.com\VA\Cloud\Projects\2019\19082_Creamery\PSY\Cadd\Plans\Civil\19082R-004-CP-C1-SC7.dwg Jan 27, 2023 - 8:58am Plot Scale: 1:1

NOTES:

1. ALL EXISTING FEATURES AS SHOWN FROM AS-BUILT DRAWINGS.
2. CONTRACTOR SHALL REMOVE ALL MECHANICAL AND ELECTRICAL EQUIPMENT, ALL PIPING AND APPURTENANCES, AND ALL OTHER ASSOCIATED EQUIPMENT FROM THE EXISTING PUMP STATION AND METER VAULTS. DEMOLISH AND REMOVE THE BUILDING AND METER VAULTS AND ALL ASSOCIATED COMPONENTS IN ACCORDANCE WITH SPECIFICATION SECTION 02221. EXISTING PUMP STATION SUBSTRUCTURE WALLS SHALL BE DEMOLISHED TO THREE (3) FEET BELOW FINISHED FLOOR ELEVATION IN PREPARATION FOR NEW FILL.
3. THE EXISTING PUMP STATION SHALL REMAIN IN SERVICE DURING CONSTRUCTION OF THE NEW PUMP STATION. BEFORE ANY DEMOLITION TO THE EXISTING PUMP STATION BEGINS, EITHER THE TEMPORARY BYPASS PUMPING SYSTEM MUST BE INSTALLED, TESTED AND OPERATIONAL OR THE NEW PUMP STATION INSTALLED, TESTED AND OPERATIONAL (TO INCLUDE COMPLETION OF THE 30-DAY DEMONSTRATION PERIOD).
4. IT IS NOTED THAT ACTUAL CONDITIONS DIFFER FROM THOSE ON THE ORIGINAL CONSTRUCTION DRAWING. CONTRACTOR IS RESPONSIBLE FOR DETERMINING ACTUAL CONDITIONS TO FULLY UNDERSTAND WHAT IS INVOLVED TO REMOVE THE STRUCTURE AND EQUIPMENT AS SHOWN HEREIN.
5. CONTRACTOR SHALL BREAK UP THE EXISTING DRYWELL AND WETWELL CONCRETE FLOOR OR CORE DRILL 12-INCH DIAMETER OPENINGS IN THE SUBSTRUCTURE FLOOR PRIOR TO FILLING THE REMAINING DRYWELL AND WETWELL SUBSTRUCTURE WITH NO. 57 STONE TO A MINIMUM OF THREE (3) FEET BELOW FINISHED FLOOR ELEVATION. CORE DRILL HOLES SHALL BE EVENLY SPACED ON BOTTOM FLOOR AND ONE CORE DRILL PROVIDED FOR EACH FOUR FOOT SQUARE AREA ON THE FLOOR.
6. CONTRACTOR SHALL REMOVE EXISTING CONCRETE WALKWAY TO THE EXTENT NECESSARY TO CONNECT NEW 16-INCH MJ SOLID SLEEVE TO EXISTING 16-INCH PIPING (BELOW WALKWAY) BEING CAREFUL TO NOT DAMAGE EXISTING PIPING.

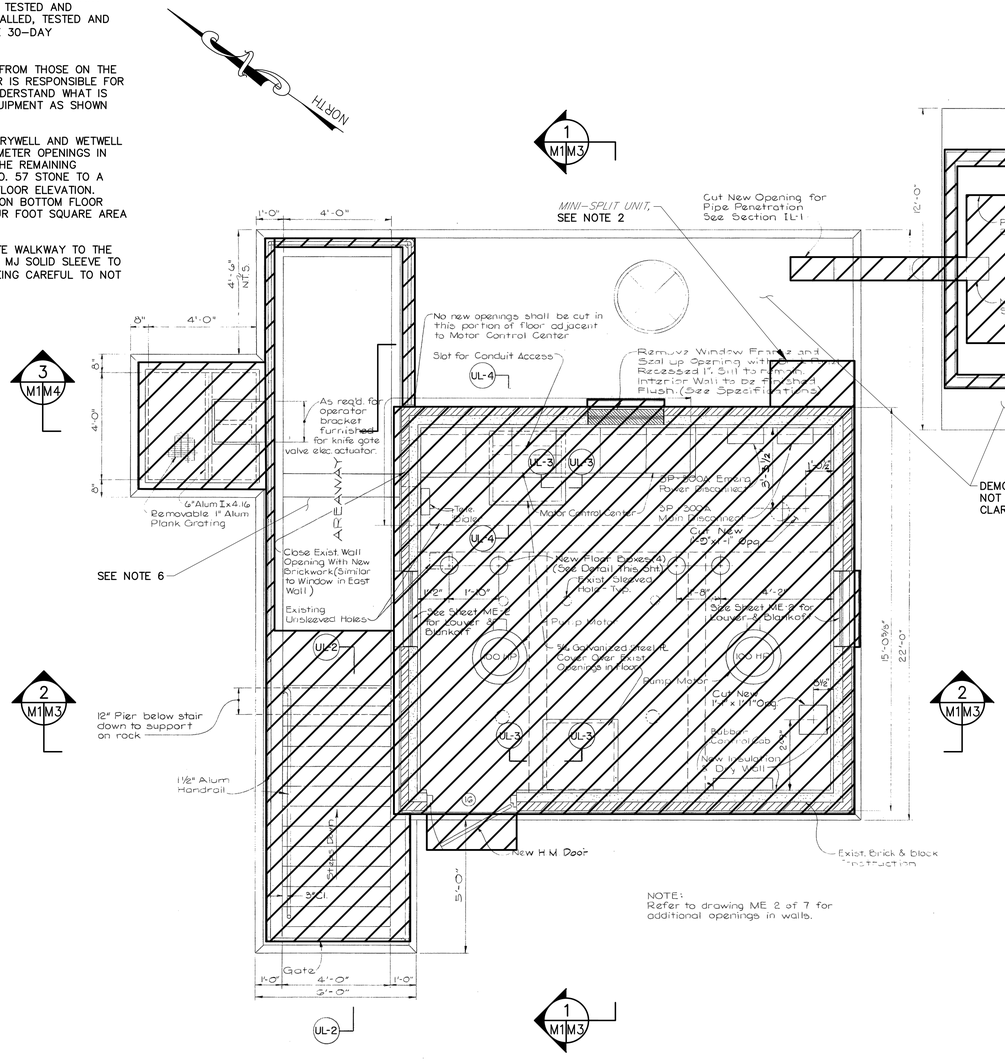

DEMOLITION – GRADE LEVEL PLAN
SCALE: ⅜"=1'-0"

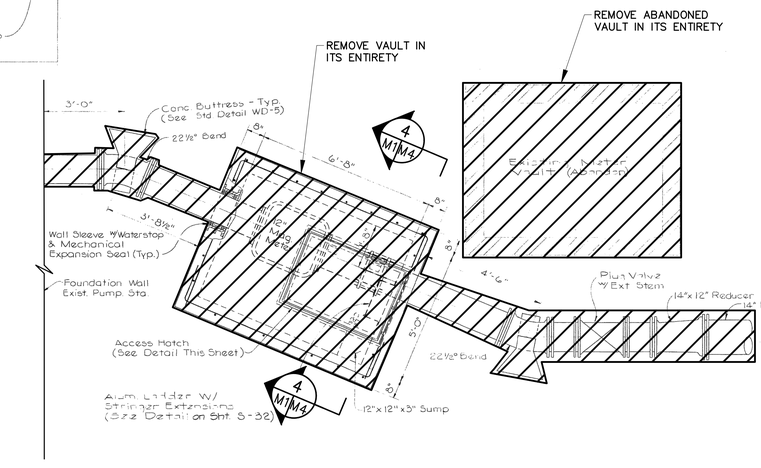

DEMOLITION – METER VAULT PLAN
SCALE: ⅜"=1'-0"

ALL DIMENSIONS AND EXISTING CONDITIONS SHALL BE CHECKED AND VERIFIED BY THE CONTRACTOR AT THE SITE.

⅜"=1'-0" 24" 12" 0 2' 4' 6'

PROFESSIONAL CERTIFICATION
I HEREBY CERTIFY THAT THESE DOCUMENTS WERE PREPARED OR APPROVED BY ME, AND THAT I AM A DULY LICENSED PROFESSIONAL ENGINEER UNDER THE LAWS OF THE STATE OF MARYLAND.
LICENSE NO. 22765
EXPIRATION DATE 07/09/2024
01/25/2023
RK&K
700 EAST PRATT STREET, SUITE 500
BALTIMORE, MARYLAND 21202
800.787.3765

NO.	DESCRIPTION	BY	DATE
	REVISIONS		

TOWN OF EMMITSBURG, MARYLAND
NEW CREAMERY ROAD SEWAGE PUMP STATION
EMMITSBURG, MARYLAND

MECHANICAL DEMOLITION PLAN – GRADE LEVEL

ENGINEER	CHECKED BY
JSG	RAL
DRAWN BY	DATE
TRM	1/2023
RK&K PROJECT NUMBER	
19082	

DRAWING NUMBER
M1
SHEET NO. 21 OF 60

RK&K\\VS - \\ad.rkk.com\rk\Docs\Projects\2019\19082_Creamery\PS\Cadd\Plans\Mech\19082PS-021-MP-M1.dwg Jan 27, 2023 - 8:32am Plot Scale 1:1

NOTES:

1. ALL EXISTING FEATURES AS SHOWN FROM AS-BUILT DRAWINGS.
2. CONTRACTOR SHALL REMOVE ALL MECHANICAL AND ELECTRICAL EQUIPMENT, ALL PIPING AND APPURTENANCES, AND ALL OTHER ASSOCIATED EQUIPMENT FROM THE EXISTING PUMP STATION AND METER VAULTS. DEMOLISH AND REMOVE THE BUILDING AND METER VAULTS AND ALL ASSOCIATED COMPONENTS IN ACCORDANCE WITH SPECIFICATION SECTION 02221. EXISTING PUMP STATION SUBSTRUCTURE WALLS SHALL BE DEMOLISHED TO THREE (3) FEET BELOW FINISHED FLOOR ELEVATION IN PREPARATION FOR NEW FILL.
3. THE EXISTING PUMP STATION SHALL REMAIN IN SERVICE DURING CONSTRUCTION OF THE NEW PUMP STATION. BEFORE ANY DEMOLITION TO THE EXISTING PUMP STATION BEGINS, EITHER THE TEMPORARY BYPASS PUMPING SYSTEM MUST BE INSTALLED, TESTED AND OPERATIONAL OR THE NEW PUMP STATION INSTALLED, TESTED AND OPERATIONAL (TO INCLUDE COMPLETION OF THE 30-DAY DEMONSTRATION PERIOD).
4. IT IS NOTED THAT ACTUAL CONDITIONS DIFFER FROM THOSE ON THE ORIGINAL CONSTRUCTION DRAWING. CONTRACTOR IS RESPONSIBLE FOR DETERMINING ACTUAL CONDITIONS TO FULLY UNDERSTAND WHAT IS INVOLVED TO REMOVE THE STRUCTURE AND EQUIPMENT AS SHOWN HEREIN.

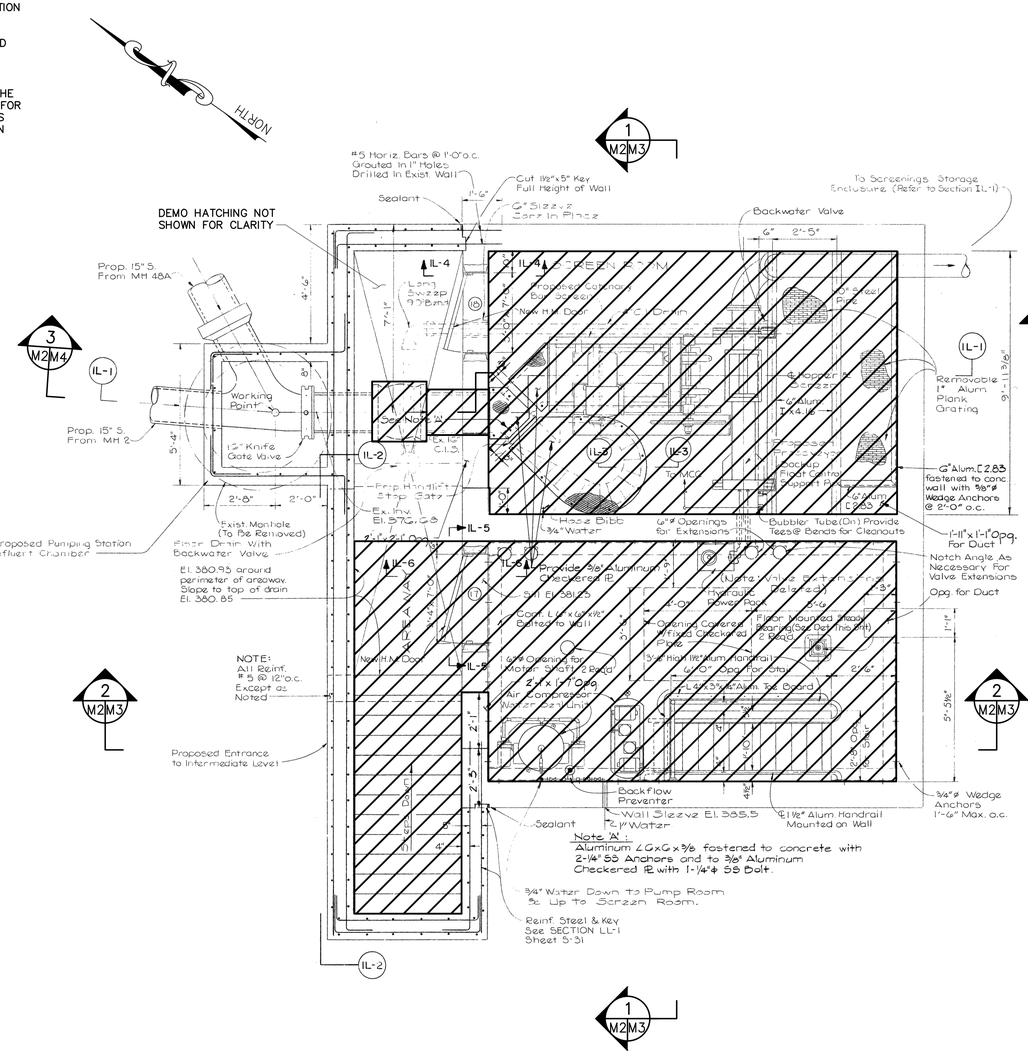

DEMOLITION – INTERMEDIATE LEVEL PLAN
SCALE: 3/8"=1'-0"

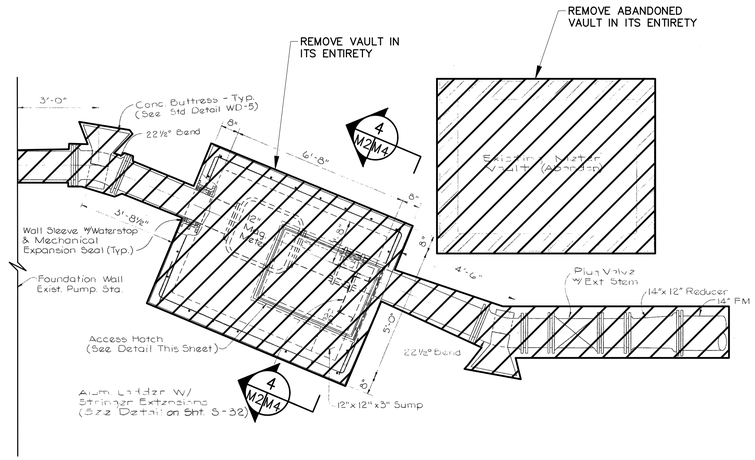

DEMOLITION – METER VAULT PLAN
SCALE: 3/8"=1'-0"

ALL DIMENSIONS AND EXISTING CONDITIONS SHALL BE CHECKED AND VERIFIED BY THE CONTRACTOR AT THE SITE.

3/8"=1'-0" 24" 12" 0 2' 4' 6'

PROFESSIONAL CERTIFICATION
I HEREBY CERTIFY THAT THESE DOCUMENTS WERE PREPARED OR APPROVED BY ME, AND THAT I AM A DULY LICENSED PROFESSIONAL ENGINEER UNDER THE LAWS OF THE STATE OF MARYLAND.
LICENSE NO. 22765
EXPIRATION DATE 07/09/2024
RAL MARYLAND REGISTERED PROFESSIONAL ENGINEER 01/25/2023
RK&K
700 EAST PRATT STREET, SUITE 500
BALTIMORE, MARYLAND 21202
800.787.3765

NO.	DESCRIPTION	BY	DATE
	REVISIONS		

TOWN OF EMMITSBURG, MARYLAND
NEW CREAMERY ROAD SEWAGE PUMP STATION
EMMITSBURG, MARYLAND

MECHANICAL DEMOLITION PLAN – INTERMEDIATE LEVEL

ENGINEER	CHECKED BY
JSG	RAL
DRAWN BY	DATE
TRM	1/2023
RK&K PROJECT NUMBER	
19082	

DRAWING NUMBER
M2
SHEET NO. 22 OF 60

RVK 2113.SYS = \\rkk.com\fs\Cloud\Projects\2019\19082_Creamery\PS\Civil\Plans\Mech\19082PS-022-MP-M2.dwg Jan 27, 2023 - 8:32am Plot Scale 1:1

NOTES:

1. ALL EXISTING FEATURES AS SHOWN FROM AS-BUILT DRAWINGS.
2. CONTRACTOR SHALL REMOVE ALL MECHANICAL AND ELECTRICAL EQUIPMENT, ALL PIPING AND APPURTENANCES, AND ALL OTHER ASSOCIATED EQUIPMENT FROM THE EXISTING PUMP STATION AND METER VAULTS. DEMOLISH AND REMOVE THE BUILDING AND METER VAULTS AND ALL ASSOCIATED COMPONENTS IN ACCORDANCE WITH SPECIFICATION SECTION 02221. EXISTING PUMP STATION SUBSTRUCTURE WALLS SHALL BE DEMOLISHED TO THREE (3) FEET BELOW FINISHED FLOOR ELEVATION IN PREPARATION FOR NEW FILL.
3. THE EXISTING PUMP STATION SHALL REMAIN IN SERVICE DURING CONSTRUCTION OF THE NEW PUMP STATION. BEFORE ANY DEMOLITION TO THE EXISTING PUMP STATION BEGINS, EITHER THE TEMPORARY BYPASS PUMPING SYSTEM MUST BE INSTALLED, TESTED AND OPERATIONAL OR THE NEW PUMP STATION INSTALLED, TESTED AND OPERATIONAL (TO INCLUDE COMPLETION OF THE 30-DAY DEMONSTRATION PERIOD).
4. IT IS NOTED THAT ACTUAL CONDITIONS DIFFER FROM THOSE ON THE ORIGINAL CONSTRUCTION DRAWING. CONTRACTOR IS RESPONSIBLE FOR DETERMINING ACTUAL CONDITIONS TO FULLY UNDERSTAND WHAT IS INVOLVED TO REMOVE THE STRUCTURE AND EQUIPMENT AS SHOWN HEREIN.
5. CONTRACTOR SHALL BREAK UP THE EXISTING DRYWELL AND WETWELL CONCRETE FLOOR OR CORE DRILL 12-INCH DIAMETER OPENINGS IN THE SUBSTRUCTURE FLOOR PRIOR TO FILLING THE REMAINING DRYWELL AND WETWELL SUBSTRUCTURE WITH NO. 57 STONE TO A MINIMUM OF THREE (3) FEET BELOW FINISHED FLOOR ELEVATION. CORE DRILL HOLES SHALL BE EVENLY SPACED ON BOTTOM FLOOR AND ONE CORE DRILL PROVIDED FOR EACH FOUR FOOT SQUARE AREA ON THE FLOOR.
6. THE EXISTING PUMP STATION ELEVATIONS SHOWN ARE BASED ON PLANS ENTITLED "TOWN OF EMMITSBURG, MARYLAND WASTEWATER TREATMENT FACILITY", CONTRACT NO. 85-01-S, REVISED TO AS-BUILT CONDITIONS, JANUARY 1990, AS PROVIDED BY THE TOWN OF EMMITSBURG. AN ADJUSTMENT OF -0.76' WAS APPLIED TO THE ELEVATIONS PROVIDED ON THE AS-BUILT DRAWINGS TO MOVE FROM THE MECHANICAL DEMOLITION DRAWINGS TO THE IMPROVEMENTS DRAWINGS. THE CONTRACTOR IS RESPONSIBLE FOR VERIFYING THE ADJUSTMENT FACTOR AND MAKING ALL NECESSARY ADJUSTMENTS IN ELEVATIONS.

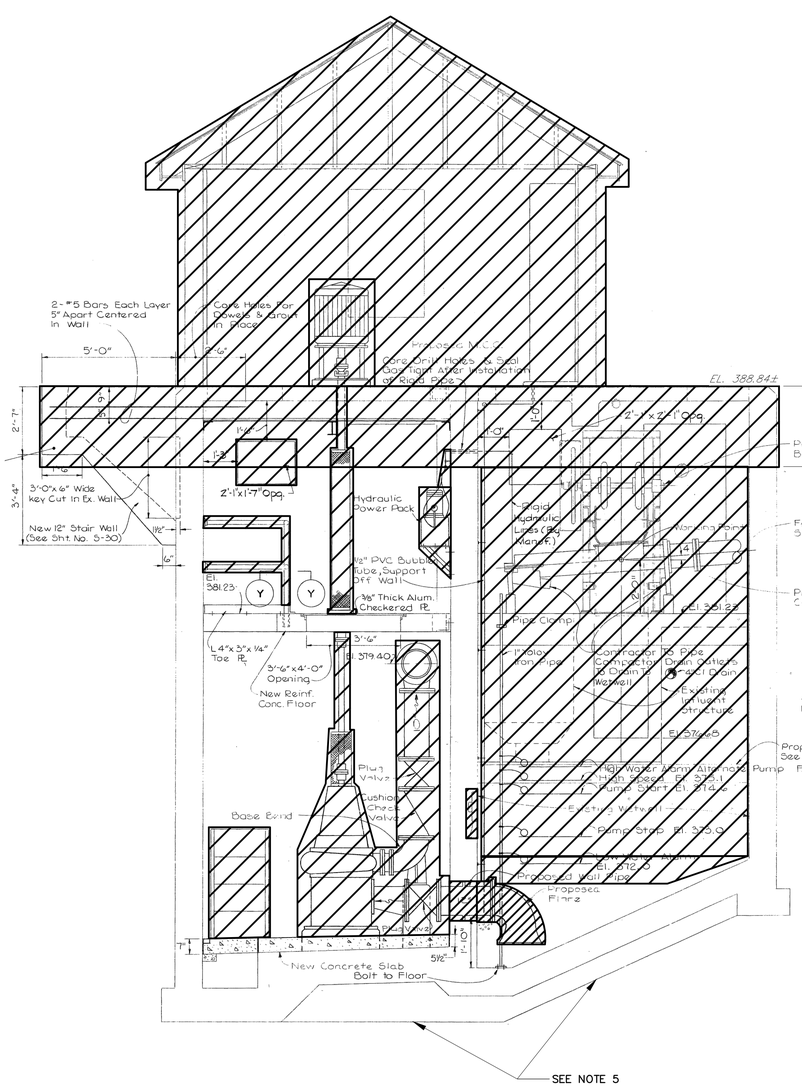

DEMOLITION SECTION 1
SCALE: 3/8"=1'-0"
M1 M3 M2

DEMOLITION SECTION 2
SCALE: 3/8"=1'-0"
M1 M3 M2

ALL DIMENSIONS AND EXISTING CONDITIONS SHALL BE CHECKED AND VERIFIED BY THE CONTRACTOR AT THE SITE.

3/8"=1'-0" 24" 12" 0 2' 4' 6'

PROFESSIONAL CERTIFICATION
I HEREBY CERTIFY THAT THESE DOCUMENTS WERE PREPARED OR APPROVED BY ME, AND THAT I AM A DULY LICENSED PROFESSIONAL ENGINEER UNDER THE LAWS OF THE STATE OF MARYLAND.
LICENSE NO. 22765
EXPIRATION DATE 07/09/2024
01/25/2023
RK&K
700 EAST PRATT STREET, SUITE 500
BALTIMORE, MARYLAND 21202
800.787.3765

NO.	DESCRIPTION	BY	DATE
	REVISIONS		

TOWN OF EMMITSBURG, MARYLAND
NEW CREAMERY ROAD SEWAGE PUMP STATION
EMMITSBURG, MARYLAND

MECHANICAL DEMOLITION SECTIONS 1 & 2

ENGINEER	CHECKED BY
JSG	RAL
DRAWN BY	DATE
TRM	1/2023
RK&K PROJECT NUMBER	
19082	

DRAWING NUMBER
M3
SHEET NO. 23 OF 60

RKK\21\SYS - \\cd.rkk.com\16\Cloud\Projects\2019\19082_Creamery\PS\Civil\Plans\Mech\19082SR-023-MP-M3.dwg Jan 27, 2023 - 8:33am Plot Scale 1:1

NOTES:

1. ALL EXISTING FEATURES AS SHOWN FROM AS–BUILT DRAWINGS.

2. CONTRACTOR SHALL REMOVE ALL MECHANICAL AND ELECTRICAL EQUIPMENT, ALL PIPING AND APPURTENANCES, AND ALL OTHER ASSOCIATED EQUIPMENT FROM THE EXISTING PUMP STATION AND METER VAULTS. DEMOLISH AND REMOVE THE BUILDING AND METER VAULTS AND ALL ASSOCIATED COMPONENTS IN ACCORDANCE WITH SPECIFICATION SECTION 02221. EXISTING PUMP STATION SUBSTRUCTURE WALLS SHALL BE DEMOLISHED TO THREE (3) FEET BELOW FINISHED FLOOR ELEVATION IN PREPARATION FOR NEW FILL.

3. THE EXISTING PUMP STATION SHALL REMAIN IN SERVICE DURING CONSTRUCTION OF THE NEW PUMP STATION. BEFORE ANY DEMOLITION TO THE EXISTING PUMP STATION BEGINS, EITHER THE TEMPORARY BYPASS PUMPING SYSTEM MUST BE INSTALLED, TESTED AND OPERATIONAL OR THE NEW PUMP STATION INSTALLED, TESTED AND OPERATIONAL (TO INCLUDE COMPLETION OF THE 30–DAY DEMONSTRATION PERIOD).

4. IT IS NOTED THAT ACTUAL CONDITIONS DIFFER FROM THOSE ON THE ORIGINAL CONSTRUCTION DRAWING. CONTRACTOR IS RESPONSIBLE FOR DETERMINING ACTUAL CONDITIONS TO FULLY UNDERSTAND WHAT IS INVOLVED TO REMOVE THE STRUCTURE AND EQUIPMENT AS SHOWN HEREIN.

5. CONTRACTOR SHALL BREAK UP THE EXISTING DRYWELL AND WETWELL CONCRETE FLOOR OR CORE DRILL 12–INCH DIAMETER OPENINGS IN THE SUBSTRUCTURE FLOOR PRIOR TO FILLING THE REMAINING DRYWELL AND WETWELL SUBSTRUCTURE WITH NO. 57 STONE TO A MINIMUM OF THREE (3) FEET BELOW FINISHED FLOOR ELEVATION. CORE DRILL HOLES SHALL BE EVENLY SPACED ON BOTTOM FLOOR AND ONE CORE DRILL PROVIDED FOR EACH FOUR FOOT SQUARE AREA ON THE FLOOR.

6. CONTRACTOR SHALL REMOVE EXISTING CONCRETE WALKWAY TO THE EXTENT NECESSARY TO CONNECT NEW 16–INCH MJ SOLID SLEEVE TO EXISTING 16–INCH PIPING (BELOW WALKWAY) BEING CAREFUL TO NOT DAMAGE EXISTING PIPING.

7. CONTRACTOR SHALL REMOVE THE VALVE OPERATOR AND EXTENSION STEM ENSURING THAT THE EXISTING VALVE IS SECURED IN THE OPEN POSITION.

8. REMOVE EXISTING WALL SECTION TO THE EXTENT NECESSARY TO INSTALL NEW 18–INCH CL52 INFLUENT SEWER PIPE.

9. THE EXISTING PUMP STATION ELEVATIONS SHOWN ARE BASED ON PLANS ENTITLED "TOWN OF EMMITSBURG, MARYLAND WASTEWATER TREATMENT FACILITY", CONTRACT NO. 85–01–S, REVISED TO AS–BUILT CONDITIONS, JANUARY 1990, AS PROVIDED BY THE TOWN OF EMMITSBURG. AN ADJUSTMENT OF –0.76' WAS APPLIED TO THE ELEVATIONS PROVIDED ON THE AS–BUILT DRAWINGS TO MOVE FROM THE MECHANICAL DEMOLITION DRAWINGS TO THE IMPROVEMENTS DRAWINGS. THE CONTRACTOR IS RESPONSIBLE FOR VERIFYING THE ADJUSTMENT FACTOR AND MAKING ALL NECESSARY ADJUSTMENTS IN ELEVATIONS.

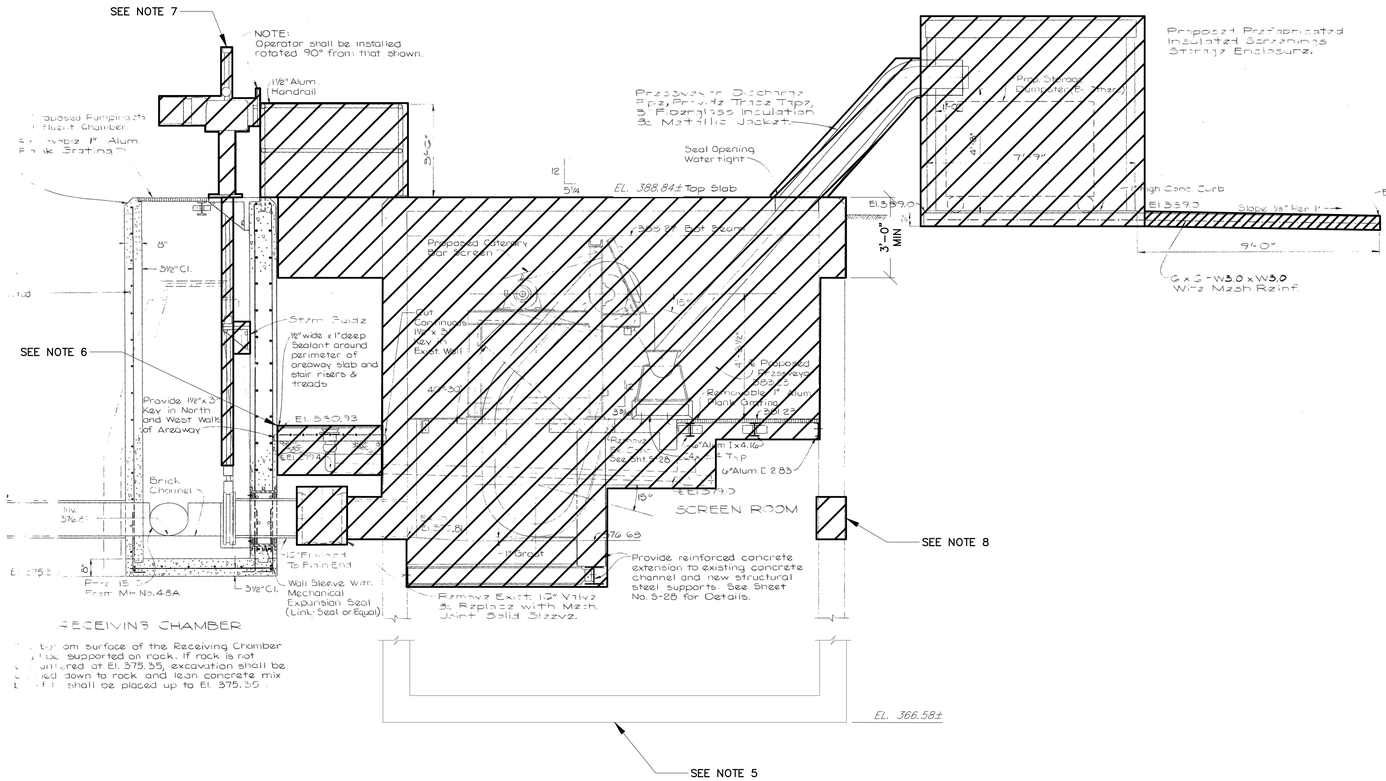

DEMOLITION SECTION 3
SCALE: ⅜"=1'–0"

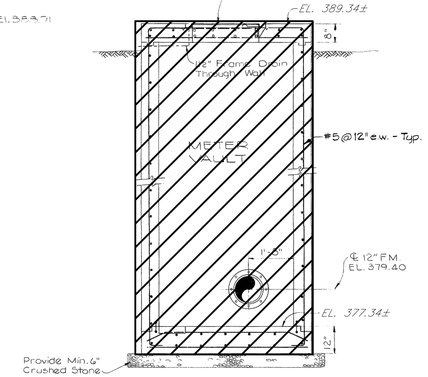

DEMOLITION SECTION 4
SCALE: ⅜"=1'–0"

ALL DIMENSIONS AND EXISTING CONDITIONS SHALL BE CHECKED AND VERIFIED BY THE CONTRACTOR AT THE SITE.

⅜"=1'–0" 24" 12" 0 2' 4' 6'

RK&K
700 EAST PRATT STREET, SUITE 500
BALTIMORE, MARYLAND 21202
800.787.3755

PROFESSIONAL CERTIFICATION

I HEREBY CERTIFY THAT THESE DOCUMENTS WERE PREPARED OR APPROVED BY ME, AND THAT I AM A DULY LICENSED PROFESSIONAL ENGINEER UNDER THE LAWS OF THE STATE OF MARYLAND.
LICENSE NO. 22765
EXPIRATION DATE 07/09/2024

REGISTERED PROFESSIONAL ENGINEER — STATE OF MARYLAND — RALPH A. LEWIS — 01/25/2023

NO.	DESCRIPTION	BY	DATE
	REVISIONS		

TOWN OF EMMITSBURG, MARYLAND
NEW CREAMERY ROAD SEWAGE PUMP STATION
EMMITSBURG, MARYLAND

MECHANICAL DEMOLITION SECTIONS 3 & 4

ENGINEER	CHECKED BY
JSG	RAL
DRAWN BY	DATE
TRM	1/2023
RK&K PROJECT NUMBER	
19082	

DRAWING NUMBER
M4
SHEET NO. 24 OF 60

RK:\21\SYS – \\pd.rkk.com\fs\Cloud\Projects\2019\19082_Creamery\PS\Civil\Plans\Mech\19082R-024-MP-M4.dwg Jan 27, 2023 – 8:33am Plot Scale 1:1

NOTES:

1. PREPARE AND PAINT ALL EXPOSED CONCRETE, STRUCTURAL STEEL, PIPES, VALVES, FITTINGS, AND OTHER FERROUS METALS IN ACCORDANCE WITH SPECIFICATION SECTION 09900. PRECAST CONCRETE BUILDING INTERIOR SHALL BE PAINTED IN ACCORDANCE WITH SPECIFICATION SECTION 13120.
2. NO ATTEMPT HAS BEEN MADE TO SHOW ALL REQUIRED PIPE SUPPORTS. CONTRACTOR SHALL BE RESPONSIBLE FOR PROVIDING A COMPLETE PIPING SUPPORT SYSTEM COMPLYING WITH MSS–SP–58, FEDERAL SPECIFICATION WW–H–171E, AND SPECIFICATION SECTION 15060.
3. NEW PIPE, VALVE AND FITTING ARRANGEMENT IS DEPENDENT ON ACTUAL PUMP EQUIPMENT FURNISHED. TAKE ACCURATE FIELD MEASUREMENTS AND PREPARE AND SUBMIT LAYOUT DRAWINGS FOR REVIEW PRIOR TO PURCHASING ANY EQUIPMENT OR FABRICATING ANY PIPING.
4. SUPPORT ALL HORIZONTALLY INSTALLED VALVES WITH AN ADJUSTABLE FLOOR MOUNTED PIPE SUPPORT, INSTALLED SO AS NOT TO INTERFERE WITH THE OPERATION OF THE VALVE.
5. PUMP ROOM FLOOR SLAB SHALL BE SLOPED TO PROVIDE POSITIVE DRAINAGE TO THE SUMP PIT.
6. ALL FORCE MAIN AND DISCHARGE PIPING JOINTS SHALL BE RESTRAINED.
7. INSTALL CONCRETE EQUIPMENT PADS FOR ALL FLOOR MOUNTED EQUIPMENT.
8. COORDINATE LOCATION OF DAVIT ARM MOUNT SLEEVE BASE BASED ON ACTUAL EQUIPMENT FURNISHED SO THAT WHEN DAVIT ARM IS STORED IN THIS BASE IT DOES NOT INTERFERE WITH ANY OTHER EQUIPMENT. FINAL LOCATION TO BE APPROVED BY THE TOWN. MOUNT SLEEVE SHALL BE INSTALLED FLUSH WITH THE TOP SLAB.
9. LOCATE DAVIT ARM PERSONNEL MAST SUCH THAT THE HOOK WILL BE CENTERED OVER THE ACCESS HATCH OPENING TO THE EXTENT POSSIBLE, BUT NO LESS THAN 15 INCHES FROM ANY EDGE OF THE OPENING.
10. INSTALL NEW 1–TON ELECTRIC HOIST AND TROLLEY CAPABLE OF TRAVELING FULL LENGTH OF MONORAIL. STOPS SHALL BE FURNISHED AND INSTALLED AT THE ENDS OF THE MONORAIL. ALL SURROUNDING EQUIPMENT AND CONDUIT RUNS SHALL BE INSTALLED SO THAT THEY DO NOT INTERFERE WITH THE OPERATION OF THE HOIST AND TROLLEY. CONTRACTOR SHALL ENSURE THAT THE HOIST HAS A MINIMUM WIRE ROPE LENGTH TO ALLOW HOIST HOOK TO REACH THE PUMP ROOM FLOOR.
11. ALL DUCT SHOWN HEREON SHALL BE NEW. ALL DUCTWORK FOR WETWELL VENTILATION SHALL BE FRP. ALL OTHER DUCTWORK SHALL BE ALUMINUM.
12. NEW ACCESS HATCH FRAMES, SOCKET MOUNTS, VALVE BOXES, TRANSDUCER ACCESS COVERS AND GUARDRAIL BASE FITTINGS SHALL BE INSTALLED FLUSH IN CONCRETE SLABS IN LOCATIONS SHOWN.
13. VERIFY HATCH SIZE AND LOCATION WILL PERMIT REMOVAL/INSTALLATION OF EQUIPMENT. HATCH SIZE IS DEPENDENT ON ACTUAL EQUIPMENT FURNISHED.
14. CONTRACTOR SHALL HAVE RAILING AND METAL STAIRS DESIGNED IN ACCORDANCE WITH SPECIFICATION SECTION 05500 METAL FABRICATIONS, INCLUDING ALL WALL AND FLOOR CONNECTIONS, AND SUBMIT TO THE ENGINEER FOR REVIEW AND APPROVAL.
15. COORDINATE WITH MANUFACTURER OF FAN FURNISHED, TAKE ACCURATE FIELD MEASUREMENTS AND SUBMIT SHOP DRAWINGS SHOWING METHOD OF FAN SUPPORT TO THE ENGINEER FOR APPROVAL. FAN SHALL NOT BE SUPPORTED BY DUCTWORK.
16. SEE POTABLE WATER RISER DIAGRAM ON DWG. M10.
17. FIELD VERIFY EXISTING 14–INCH FORCE MAIN ELEVATION AT THE CONNECTION POINT BY TEST PITTING PRIOR TO SUBMITTING THE PIPING LAYOUT DRAWINGS. SEE SITE PLANS FOR A CONTINUATION OF THE FORCE MAIN.
18. NEW STEPS SHALL BE STEEL–REINFORCED PLASTIC MANHOLE STEP MEETING ASTM C478 AND OSHA STD 1910.24(B) M.A. INDUSTRIES 12–INCH DOUBLE–FACE STEP OR APPROVED EQUAL. INSTALL IN ACCORDANCE WITH FREDERICK COUNTY STANDARD DETAIL PLATE NO. 201.1.
19. LOCATE PORTABLE EQUIPMENT HOIST PEDESTAL BASE SUCH THAT HOIST HOOK CAN BE CENTERED OVER THE GRINDER PICK POINT BY ROTATING THE MAST INSTALLED. THE CONTRACTOR SHALL DEMONSTRATE TO THE OWNER THAT THE HOIST CAN BE USED TO REMOVE/INSTALL THE GRINDER COMPLETELY OUT OF/INTO THE WETWELL WITHOUT THE NEED TO ENTER THE WETWELL.
20. PROVIDE 2–INCH SCH 80 PVC DRAIN PIPING FROM THE EYEWASH ALONG THE WALL TO THE SUMP PIT. DRAIN PIPING SHALL SLOPE ¼" PER FOOT TO PROVIDE POSITIVE DRAINAGE TO SUMP PIT.
21. CAST IN NEW 6–INCH VALVE BOX RISERS SO THAT THE RISERS WITH LIDS ARE FLUSH WITH TOP OF WETWELL. VALVE BOX RISER SHALL BE TRUMBULL MANUFACTURING, INC. ITEM NO. 367–5038, OR APPROVED EQUAL. PROVIDE STANDARD 5 1/4–INCH STANDARD SEWER LID FOR EACH RISER.
22. SEE DWG. M9 FOR ALL MECHANICAL SCHEDULES.

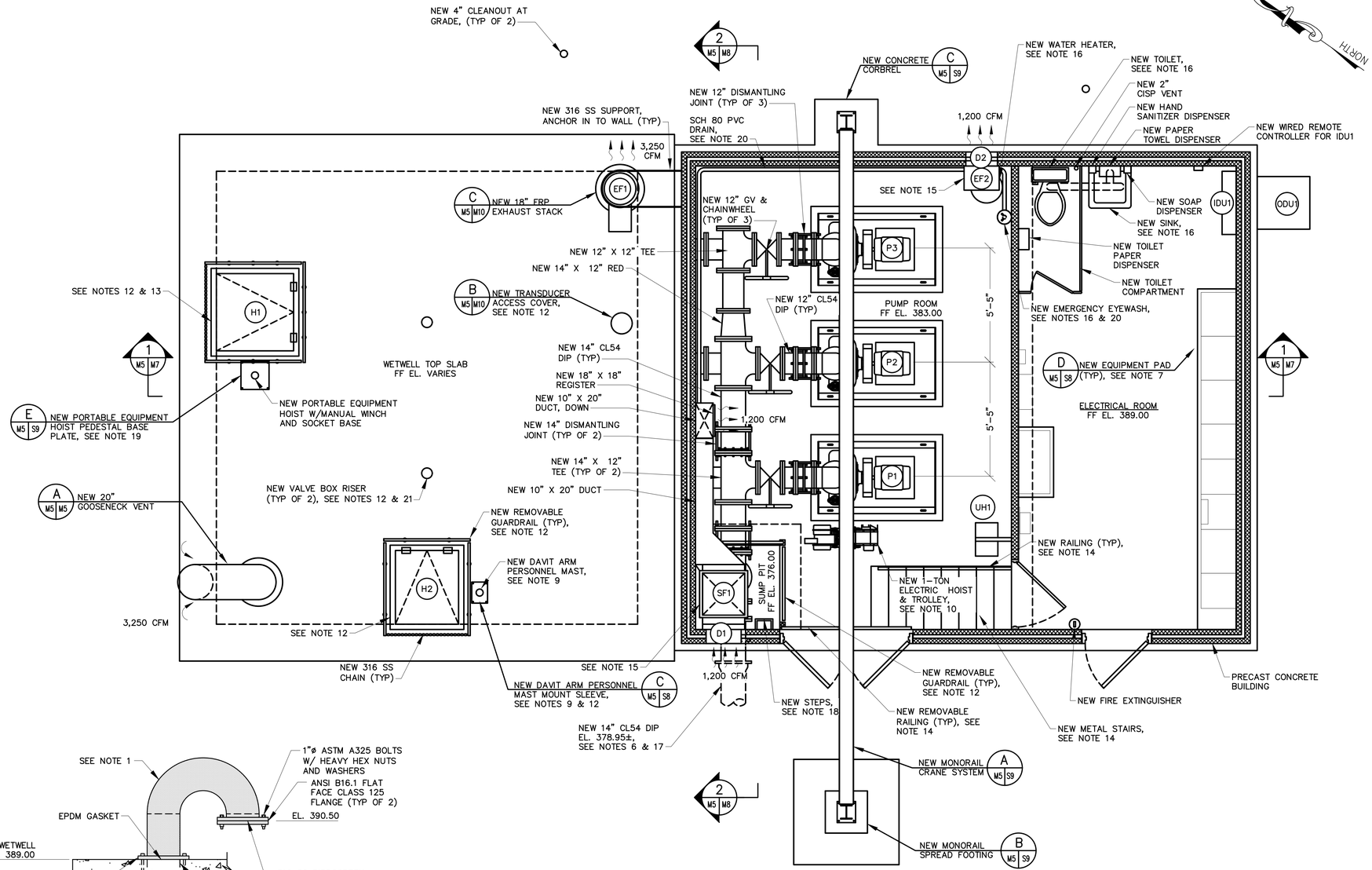

MECHANICAL IMPROVEMENT PLAN – GRADE LEVEL
SCALE: ⅜"=1'–0"

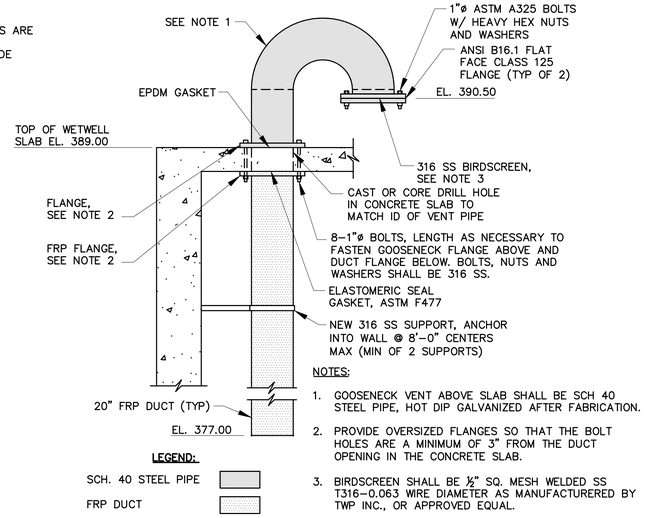

NOTES:

1. GOOSENECK VENT ABOVE SLAB SHALL BE SCH 40 STEEL PIPE, HOT DIP GALVANIZED AFTER FABRICATION.
2. PROVIDE OVERSIZED FLANGES SO THAT THE BOLT HOLES ARE A MINIMUM OF 3" FROM THE DUCT OPENING IN THE CONCRETE SLAB.
3. BIRDSCREEN SHALL BE ½" SQ. MESH WELDED SS T316–0.063 WIRE DIAMETER AS MANUFACTURERED BY TWP INC., OR APPROVED EQUAL.

20" GOOSENECK VENT DETAIL
NTS
A M5 M5 M6

ALL DIMENSIONS AND EXISTING CONDITIONS SHALL BE CHECKED AND VERIFIED BY THE CONTRACTOR AT THE SITE.

⅜"=1'–0" 24" 12" 0 2' 4' 6'

PROFESSIONAL CERTIFICATION
I HEREBY CERTIFY THAT THESE DOCUMENTS WERE PREPARED OR APPROVED BY ME, AND THAT I AM A DULY LICENSED PROFESSIONAL ENGINEER UNDER THE LAWS OF THE STATE OF MARYLAND. LICENSE NO. 22765 EXPIRATION DATE 07/09/2024
MARYLAND REGISTERED PROFESSIONAL ENGINEER 01/25/2023
RK&K
700 EAST PRATT STREET, SUITE 500
BALTIMORE, MARYLAND 21202
800.787.3755

NO.	DESCRIPTION	BY	DATE
	REVISIONS		

TOWN OF EMMITSBURG, MARYLAND
NEW CREAMERY ROAD SEWAGE PUMP STATION
EMMITSBURG, MARYLAND

MECHANICAL IMPROVEMENT PLAN – GRADE LEVEL

ENGINEER	CHECKED BY
JSG	RAL
DRAWN BY	DATE
TRM	1/2023
RK&K PROJECT NUMBER	
19082	

DRAWING NUMBER
M5
SHEET NO. 25 OF 60

RK&K 21\SYS – \\rkk.com\VA\Cloud\Projects\2019\19082_Cranmer.PS\Codd\Plans\March\190823R–02S–MP–M5.dwg Jan 27, 2021 – 8:34am Plot Scale: 1:1

NOTES:

1. PREPARE AND PAINT ALL EXPOSED CONCRETE, STRUCTURAL STEEL, PIPES, VALVES, FITTINGS, AND OTHER FERROUS METALS IN ACCORDANCE WITH SPECIFICATION SECTION 09900. PRECAST CONCRETE BUILDING INTERIOR SHALL BE PAINTED IN ACCORDANCE WITH SPECIFICATION SECTION 13120.
2. COAT ALL WETWELL INTERIOR CONCRETE SURFACES WITH A CORROSION PROTECTION LINING SYSTEM IN ACCORDANCE WITH SPECIFICATION SECTION 09960.
3. ALL PIPE SUPPORTS AND OTHER HARDWARE LOCATED WITHIN THE WETWELL SHALL BE 316 SS.
4. NO ATTEMPT HAS BEEN MADE TO SHOW ALL REQUIRED PIPE SUPPORTS. CONTRACTOR SHALL BE RESPONSIBLE FOR PROVIDING A COMPLETE PIPING SUPPORT SYSTEM COMPLYING WITH MSS–SP–58, FEDERAL SPECIFICATION WW–H–171E, AND SPECIFICATION SECTION 15060.
5. NEW PIPE, VALVE AND FITTING ARRANGEMENT IS DEPENDENT ON ACTUAL PUMP EQUIPMENT FURNISHED. TAKE ACCURATE FIELD MEASUREMENTS AND PREPARE AND SUBMIT LAYOUT DRAWINGS FOR REVIEW PRIOR TO PURCHASING ANY EQUIPMENT OR FABRICATING ANY PIPING.
6. SUPPORT ALL HORIZONTALLY INSTALLED VALVES WITH AN ADJUSTABLE FLOOR MOUNTED PIPE SUPPORT, INSTALLED SO AS NOT TO INTERFERE WITH THE OPERATION OF THE VALVE.
7. PUMP ROOM FLOOR SLAB SHALL BE SLOPED TO PROVIDE POSITIVE DRAINAGE TO THE SUMP PIT.
8. ALL FORCE MAIN AND DISCHARGE PIPING JOINTS SHALL BE RESTRAINED.
9. INSTALL A FLEXIBLE FITTING, AS NECESSARY, FOR DRAIN BENDS, FERNCO QUICK ELL, RED VALVE SLIP–ON, NEOPRENE ELBOW, OR APPROVED EQUAL.
10. ALL DUCT SHOWN HEREON SHALL BE NEW. ALL DUCTWORK FOR WETWELL VENTILATION SHALL BE FRP. ALL OTHER DUCTWORK SHALL BE ALUMINUM.
11. CONTRACTOR SHALL HAVE RAILING AND METAL STAIRS DESIGNED IN ACCORDANCE WITH SPECIFICATION SECTION 05500 METAL FABRICATIONS, INCLUDING ALL WALL AND FLOOR CONNECTIONS, AND SUBMIT TO THE ENGINEER FOR REVIEW AND APPROVAL.
12. FRP LADDER SHALL BE PROVIDED WITH EQUAL RUNG SPACING AT 1'–0" MAX.
13. DRAIN PIPING SHALL SLOPE ¼" PER FOOT TO PROVIDE POSITIVE DRAINAGE TO THE WETWELL.
14. SEE POTABLE WATER RISER DIAGRAM ON DWG. M10.
15. FIELD VERIFY EXISTING 14–INCH FORCE MAIN ELEVATION AT THE CONNECTION POINT BY TEST PITTING PRIOR TO SUBMITTING THE PIPING LAYOUT DRAWINGS. SEE SITE PLANS FOR A CONTINUATION OF THE FORCE MAIN, WATER SERVICE, AND PVC DRAIN PIPING FROM VALVE VAULT.
16. NEW STEPS SHALL BE STEEL–REINFORCED PLASTIC MANHOLE STEP MEETING ASTM C478 AND OSHA STD 1910.24(B) M.A. INDUSTRIES 12–INCH DOUBLE–FACE STEP OR APPROVED EQUAL. INSTALL IN ACCORDANCE WITH FREDERICK COUNTY STANDARD DETAIL PLATE NO. 201.1.
17. NEW GUARDRAIL BASE FITTINGS SHALL BE INSTALLED FLUSH IN CONCRETE SLAB.
18. PROVIDE 2–INCH SCH 80 PVC DRAIN PIPING FROM THE EYEWASH ALONG THE WALL TO THE SUMP PIT. DRAIN PIPING SHALL SLOPE ¼" PER FOOT TO PROVIDE POSITIVE DRAINAGE TO SUMP PIT.
19. INSTALL EQUIPMENT PADS FOR ALL FLOOR MOUNTED EQUIPMENT.
20. SEE DWG. M9 FOR ALL MECHANICAL SCHEDULES.

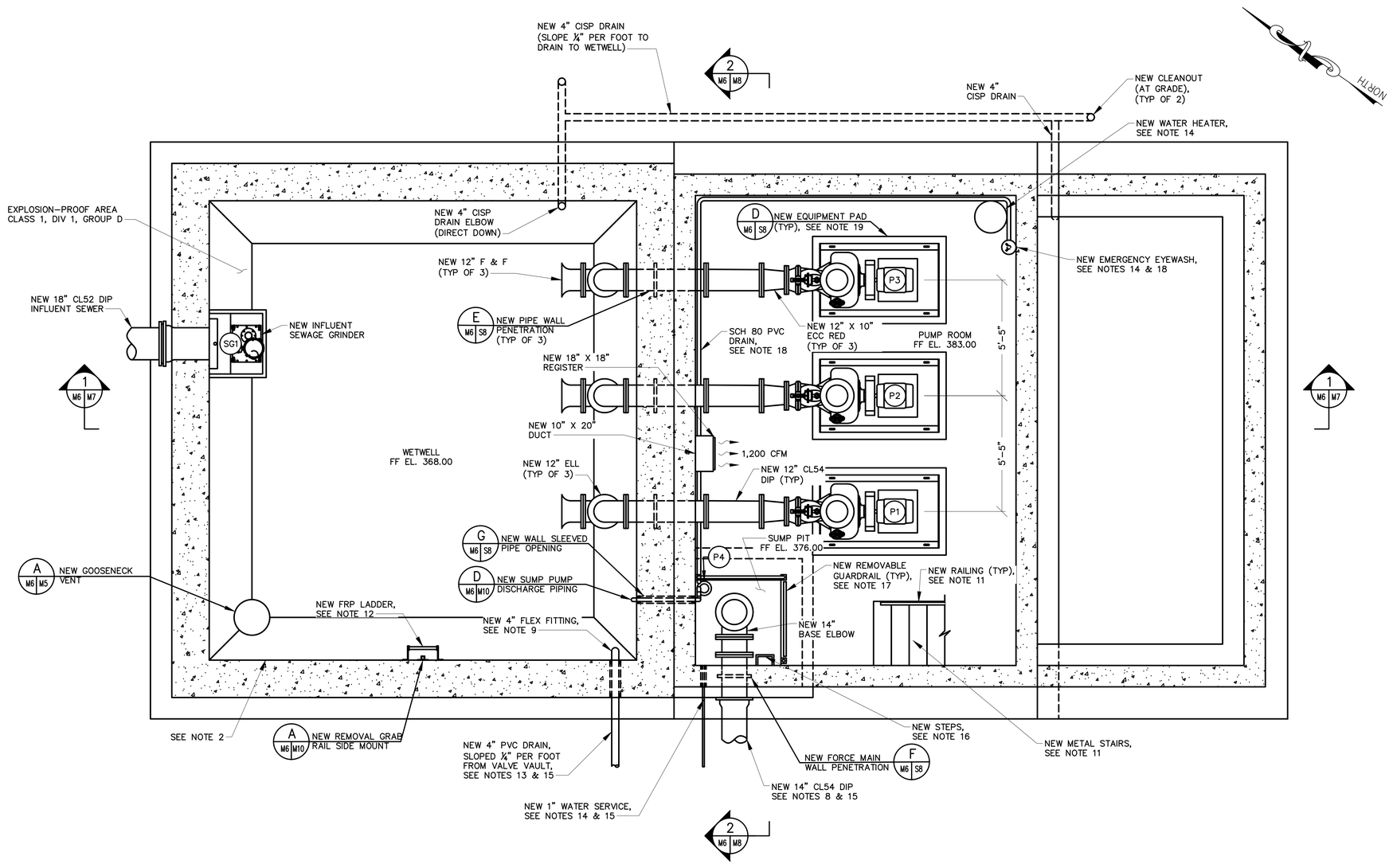

MECHANICAL IMPROVEMENT PLAN – INTERMEDIATE LEVEL
SCALE: ⅜"=1'–0"

ALL DIMENSIONS AND EXISTING CONDITIONS SHALL BE CHECKED AND VERIFIED BY THE CONTRACTOR AT THE SITE.

⅜"=1'–0" 24" 12" 0 2' 4' 6'

PROFESSIONAL CERTIFICATION
I HEREBY CERTIFY THAT THESE DOCUMENTS WERE PREPARED OR APPROVED BY ME, AND THAT I AM A DULY LICENSED PROFESSIONAL ENGINEER UNDER THE LAWS OF THE STATE OF MARYLAND. LICENSE NO. 22765 EXPIRATION DATE 07/09/2024
RAMEY L. KOSKO STATE OF MARYLAND PROFESSIONAL ENGINEER 01/25/2023
RK&K
700 EAST PRATT STREET, SUITE 500
BALTIMORE, MARYLAND 21202
800.787.3755

NO.	DESCRIPTION	BY	DATE
	REVISIONS		

TOWN OF EMMITSBURG, MARYLAND
NEW CREAMERY ROAD SEWAGE PUMP STATION
EMMITSBURG, MARYLAND

MECHANICAL IMPROVEMENT PLAN – INTERMEDIATE LEVEL

ENGINEER	CHECKED BY
JSG	RAL
DRAWN BY	DATE
TRM	1/2023
RK&K PROJECT NUMBER	
19082	

DRAWING NUMBER
M6
SHEET NO. 26 OF 60

RK&K 211.SYS – \\adl-fs.com\VA\Cloud\Projects\2019\19082_Creamery\PS\Cadd\Plans\Mech\19082CR-02E-MP-M6.dwg Jan 27, 2023 – 8:35am Plot Scale: 1:1

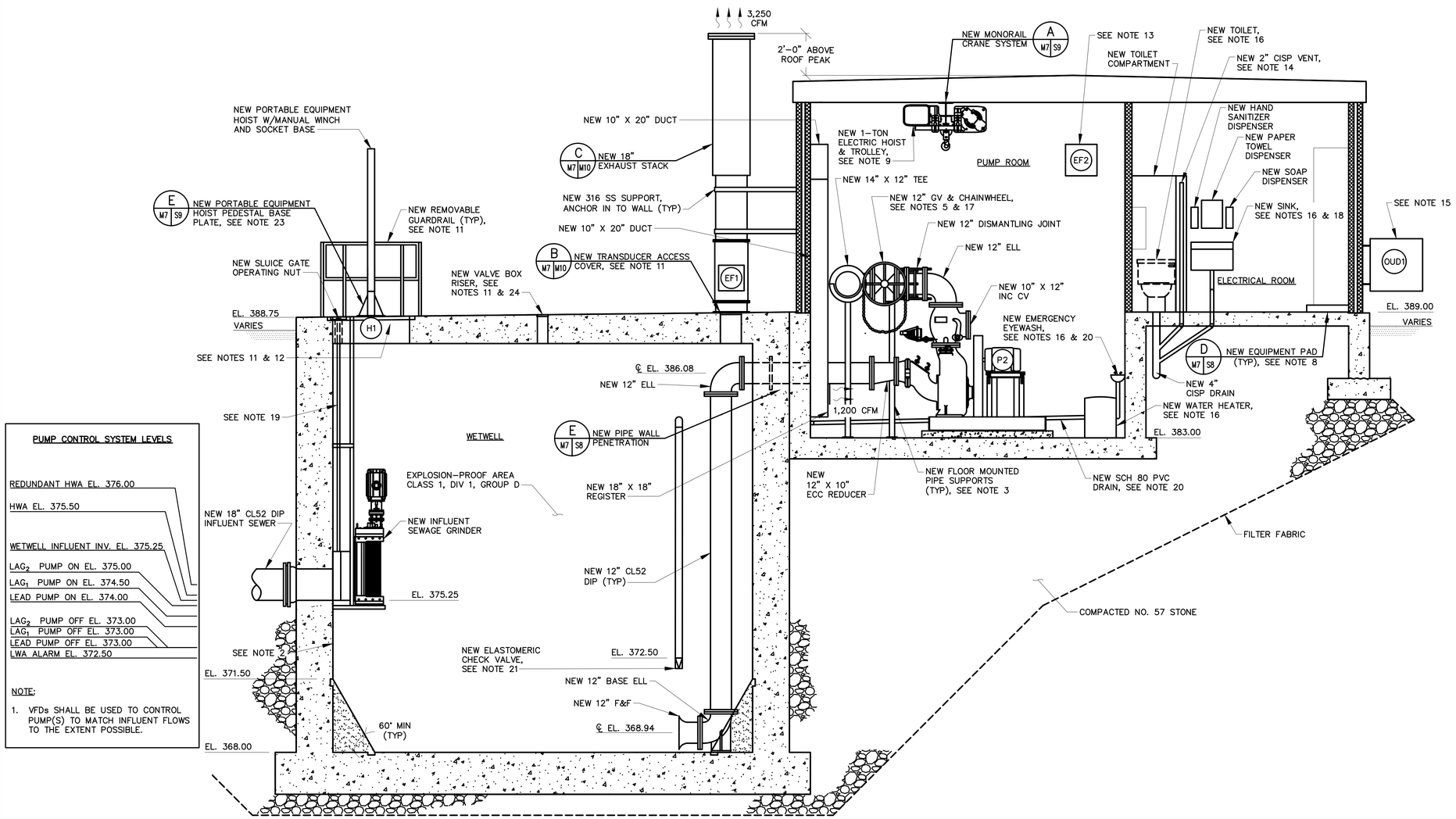

PUMP CONTROL SYSTEM LEVELS

REDUNDANT HWA EL. 376.00

HWA EL. 375.50

WETWELL INFLUENT INV. EL. 375.25

LAG_2 PUMP ON EL. 375.00

LAG_1 PUMP ON EL. 374.50

LEAD PUMP ON EL. 374.00

LAG_2 PUMP OFF EL. 373.00

LAG_1 PUMP OFF EL. 373.00

LEAD PUMP OFF EL. 373.00

LWA ALARM EL. 372.50

NOTE:

1. VFDs SHALL BE USED TO CONTROL PUMP(S) TO MATCH INFLUENT FLOWS TO THE EXTENT POSSIBLE.

MECHANICAL IMPROVEMENT SECTION 1
SCALE: 3/8"=1'-0"
M5 M7 M6

ALL DIMENSIONS AND EXISTING CONDITIONS SHALL BE CHECKED AND VERIFIED BY THE CONTRACTOR AT THE SITE.

NOTES:

1. PREPARE AND PAINT ALL EXPOSED CONCRETE, STRUCTURAL STEEL, PIPES, VALVES, FITTINGS, AND OTHER FERROUS METALS IN ACCORDANCE WITH SPECIFICATION SECTION 09900. PRECAST CONCRETE BUILDING INTERIOR SHALL BE PAINTED IN ACCORDANCE WITH SPECIFICATION SECTION 13120.
2. COAT ALL WETWELL INTERIOR CONCRETE SURFACES WITH A CORROSION PROTECTION LINING SYSTEM IN ACCORDANCE WITH SPECIFICATION SECTION 09960.
3. NO ATTEMPT HAS BEEN MADE TO SHOW ALL REQUIRED PIPE SUPPORTS. CONTRACTOR SHALL BE RESPONSIBLE FOR PROVIDING A COMPLETE PIPING SUPPORT SYSTEM COMPLYING WITH MSS-SP-58, FEDERAL SPECIFICATION WW-H-171E, AND SPECIFICATION SECTION 15060.
4. NEW PIPE, VALVE AND FITTING ARRANGEMENT IS DEPENDENT ON ACTUAL PUMP EQUIPMENT FURNISHED. TAKE ACCURATE FIELD MEASUREMENTS AND PREPARE AND SUBMIT LAYOUT DRAWINGS FOR REVIEW PRIOR TO PURCHASING ANY EQUIPMENT OR FABRICATING ANY PIPING.
5. SUPPORT ALL HORIZONTALLY INSTALLED VALVES WITH AN ADJUSTABLE FLOOR MOUNTED PIPE SUPPORT, INSTALLED SO AS NOT TO INTERFERE WITH THE OPERATION OF THE VALVE.
6. PUMP ROOM FLOOR SLAB SHALL BE SLOPED TO PROVIDE POSITIVE DRAINAGE TO THE SUMP PIT.
7. ALL FORCE MAIN AND DISCHARGE PIPING JOINTS SHALL BE RESTRAINED.
8. INSTALL CONCRETE EQUIPMENT PADS FOR ALL FLOOR MOUNTED EQUIPMENT.
9. INSTALL NEW 1-TON ELECTRIC HOIST AND TROLLEY CAPABLE OF TRAVELING FULL LENGTH OF MONORAIL. STOPS SHALL BE FURNISHED AND INSTALLED AT THE ENDS OF THE MONORAIL. ALL SURROUNDING EQUIPMENT AND CONDUIT RUNS SHALL BE INSTALLED SO THAT THEY DO NOT INTERFERE WITH THE OPERATION OF THE HOIST AND TROLLEY. CONTRACTOR SHALL ENSURE THAT THE HOIST HAS A MINIMUM WIRE ROPE LENGTH TO ALLOW HOIST HOOK TO REACH THE PUMP ROOM FLOOR.
10. ALL DUCT SHOWN HEREON SHALL BE NEW. ALL DUCTWORK FOR WETWELL VENTILATION SHALL BE FRP. ALL OTHER DUCTWORK SHALL BE ALUMINUM.
11. NEW ACCESS HATCH FRAMES, SOCKET MOUNTS, VALVE BOXES, TRANSDUCER ACCESS COVERS AND GUARDRAIL BASE FITTINGS SHALL BE INSTALLED FLUSH IN CONCRETE SLABS IN LOCATIONS SHOWN.
12. VERIFY HATCH SIZE AND LOCATION WILL PERMIT REMOVAL/INSTALLATION OF EQUIPMENT. HATCH SIZE IS DEPENDENT ON ACTUAL EQUIPMENT FURNISHED.
13. COORDINATE WITH MANUFACTURER OF FAN FURNISHED, TAKE ACCURATE FIELD MEASUREMENTS AND SUBMIT SHOP DRAWINGS SHOWING METHOD OF FAN SUPPORT TO THE ENGINEER FOR APPROVAL. FAN SHALL NOT BE SUPPORTED BY DUCTWORK.
14. PROVIDE NEW 2" CISP IN ACCORDANCE WITH INTERNATIONAL PLUMBING CODE. VENT THROUGH WALL OR ROOF, AS REQUIRED. COORDINATE WITH PRECAST BUILDING MANUFACTURER TO SEAL OPENINGS.
15. COORDINATE WITH THE PRECAST CONCRETE BUILDING MANUFACTURER FOR MOUNTING OF THE MINI-SPLIT OUTDOOR UNIT AND PROVIDE MOUNTING GEAR AS REQUIRED.
16. SEE POTABLE WATER RISER DIAGRAM ON DWG. M10.
17. PROVIDE CHAINWHEEL OF SUFFICIENT LENGTH TO PROVIDE OPERATION OF THE GATE VALVE WHEN STANDING IN THE PUMP ROOM.
18. PROVIDE DRAIN TRAPS IN ACCORDANCE WITH INTERNATIONAL PLUMBING CODE. DRAIN TRAPS NOT SHOWN FOR CLARITY.
19. PROVIDE EXTENSION STEM GUIDES FOR THE SLUICE GATE EXTENSION STEM SO THAT THE UPPERMOST GUIDE IS NO MORE THAN 6-INCHES AWAY FROM THE OPERATING NUT.
20. PROVIDE 2-INCH SCH 80 PVC DRAIN PIPING FROM THE EYEWASH ALONG THE WALL TO THE SUMP PIT. DRAIN PIPING SHALL SLOPE ¼" PER FOOT TO PROVIDE POSITIVE DRAINAGE TO SUMP PIT.
21. INSTALL ELASTOMERIC CHECK VALVE ON BOTTOM OF ALL DRAIN PIPES IN WETWELL AT LEAST 6 INCHES BELOW THE MINIMUM SEWAGE LEVEL.
22. ALL PIPE SUPPORTS AND OTHER HARDWARE LOCATED WITHIN THE WETWELL SHALL BE 316SS.
23. LOCATE PORTABLE EQUIPMENT HOIST PEDESTAL BASE SUCH THAT HOIST HOOK CAN BE CENTERED OVER THE GRINDER PICK POINT BY ROTATING THE MAST INSTALLED. THE CONTRACTOR SHALL DEMONSTRATE TO THE OWNER THAT THE HOIST CAN BE USED TO REMOVE/INSTALL THE GRINDER COMPLETELY OUT OF/INTO THE WETWELL WITHOUT THE NEED TO ENTER THE WETWELL.
24. CAST IN NEW 6-INCH VALVE BOX RISERS SO THAT THE RISERS WITH LIDS ARE FLUSH WITH TOP OF WETWELL. VALVE BOX RISER SHALL BE TRUMBULL MANUFACTURING, INC. ITEM NO. 367-5038, OR APPROVED EQUAL. PROVIDE STANDARD 5 1/4-INCH STANDARD SEWER LID FOR EACH RISER.
25. SEE DWG. M9 FOR ALL MECHANICAL SCHEDULES.

3/8"=1'-0" 24" 12" 0 2' 4' 6'

MARYLAND REGISTERED PROFESSIONAL ENGINEER — STATE OF MARYLAND — 01/25/2023

PROFESSIONAL CERTIFICATION

I HEREBY CERTIFY THAT THESE DOCUMENTS WERE PREPARED OR APPROVED BY ME, AND THAT I AM A DULY LICENSED PROFESSIONAL ENGINEER UNDER THE LAWS OF THE STATE OF MARYLAND. LICENSE NO. 22765 EXPIRATION DATE 07/09/2024

RK&K
700 EAST PRATT STREET, SUITE 500
BALTIMORE, MARYLAND 21202
800.787.3755

NO.	DESCRIPTION	BY	DATE
	REVISIONS		

TOWN OF EMMITSBURG, MARYLAND
NEW CREAMERY ROAD SEWAGE PUMP STATION
EMMITSBURG, MARYLAND

MECHANICAL IMPROVEMENT SECTION 1

ENGINEER	CHECKED BY
JSG	RAL
DRAWN BY	DATE
TRM	1/2023
RK&K PROJECT NUMBER	
19082	

DRAWING NUMBER
M7
SHEET NO. 27 OF 60

RK&K\\ \\rydrk.com\\fs\\Data\Projects\2019\19082_Creamery\PS\Civil\Plans\Mech\19082SR-027-MP-M7.dwg Jan 27, 2023 - 8:35am Plot Scale 1:1

NOTES:

1. PREPARE AND PAINT ALL EXPOSED CONCRETE, STRUCTURAL STEEL, PIPES, VALVES, FITTINGS, AND OTHER FERROUS METALS IN ACCORDANCE WITH SPECIFICATION SECTION 09900. PRECAST CONCRETE BUILDING INTERIOR SHALL BE PAINTED IN ACCORDANCE WITH SPECIFICATION SECTION 13120.
2. NO ATTEMPT HAS BEEN MADE TO SHOW ALL REQUIRED PIPE SUPPORTS. CONTRACTOR SHALL BE RESPONSIBLE FOR PROVIDING A COMPLETE PIPING SUPPORT SYSTEM COMPLYING WITH MSS-SP-58, FEDERAL SPECIFICATION WW-H-171E, AND SPECIFICATION SECTION 15060.
3. PUMP ROOM FLOOR SLAB SHALL BE SLOPED TO PROVIDE POSITIVE DRAINAGE TO THE SUMP PIT.
4. ALL FORCE MAIN AND DISCHARGE PIPING JOINTS SHALL BE RESTRAINED.
5. ALL DUCT SHOWN HEREON SHALL BE NEW. ALL DUCTWORK FOR WETWELL VENTILATION SHALL BE FRP. ALL OTHER DUCTWORK SHALL BE ALUMINUM.
6. ALL GUARDRAIL BASE FITTINGS SHALL BE INSTALLED FLUSH IN CONCRETE SLABS.
7. COORDINATE WITH MANUFACTURER OF FAN FURNISHED, TAKE ACCURATE FIELD MEASUREMENTS AND SUBMIT SHOP DRAWINGS SHOWING METHOD OF FAN SUPPORT TO THE ENGINEER FOR APPROVAL. FAN SHALL NOT BE SUPPORTED BY DUCTWORK.
8. NEW STEPS SHALL BE STEEL-REINFORCED PLASTIC MANHOLE STEP MEETING ASTM C478 AND OSHA STD 1910.24(B) M.A. INDUSTRIES 12-INCH DOUBLE-FACE STEP OR APPROVED EQUAL. INSTALL IN ACCORDANCE WITH FREDERICK COUNTY STANDARD DETAIL PLATE NO. 201.1.
9. PROVIDE 2-INCH SCH 80 PVC DRAIN PIPING FROM THE EYEWASH ALONG THE WALL TO THE SUMP PIT. DRAIN PIPING SHALL SLOPE ¼" PER FOOT TO PROVIDE POSITIVE DRAINAGE TO SUMP PIT.
10. FIELD VERIFY EXISTING 14-INCH FORCE MAIN ELEVATION AT THE CONNECTION POINT BY TEST PITTING PRIOR TO SUBMITTING THE PIPING LAYOUT DRAWINGS. SEE SITE PLANS FOR A CONTINUATION OF THE FORCE MAIN.
11. DRAIN PIPING SHALL SLOPE ¼" PER FOOT TO PROVIDE POSITIVE DRAINAGE TO THE WETWELL.
12. CONTRACTOR SHALL TAP THE BOSS ON TOP OF THE 14" ELBOW. PROVIDE A 2" BOSS FOR INSTALLATION OF 2" 316SS PIPE NIPPLE.
13. INSTALL ELASTOMERIC CHECK VALVE ON BOTTOM OF ALL DRAIN PIPES IN WETWELL AT LEAST 6 INCHES BELOW THE MINIMUM SEWAGE LEVEL.
14. NEW PIPE, VALVE AND FITTING ARRANGEMENT IS DEPENDENT ON ACTUAL PUMP EQUIPMENT FURNISHED. TAKE ACCURATE FIELD MEASUREMENTS AND PREPARE AND SUBMIT LAYOUT DRAWINGS FOR REVIEW PRIOR TO PURCHASING ANY EQUIPMENT OR FABRICATING ANY PIPING.
15. SEE DWG. M9 FOR ALL MECHANICAL SCHEDULES.

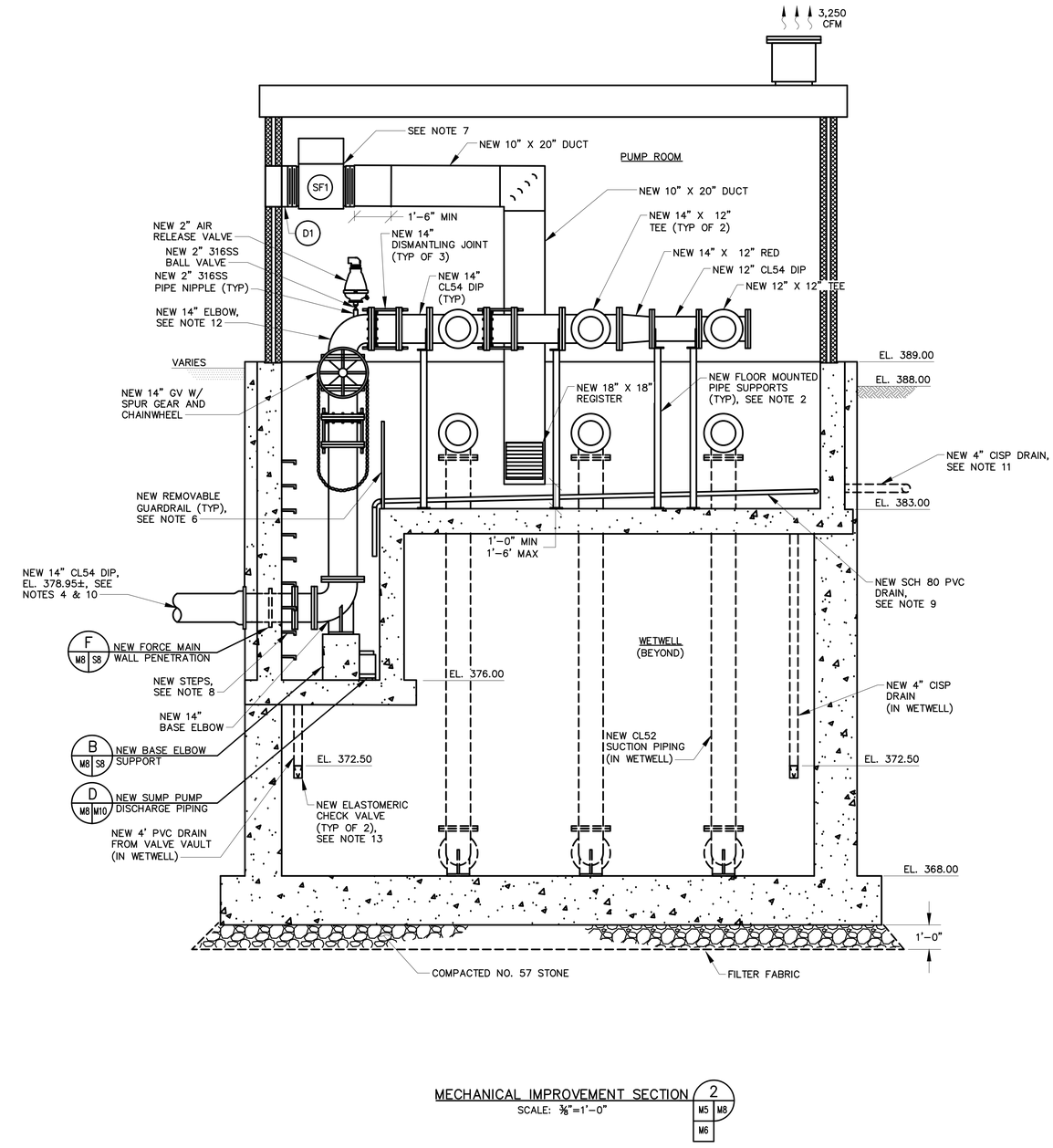

MECHANICAL IMPROVEMENT SECTION 2
M5 M8 M6
SCALE: ⅜"=1'-0"

ALL DIMENSIONS AND EXISTING CONDITIONS SHALL BE CHECKED AND VERIFIED BY THE CONTRACTOR AT THE SITE.

⅜"=1'-0" 24" 12" 0 2' 4' 6'

PROFESSIONAL CERTIFICATION
I HEREBY CERTIFY THAT THESE DOCUMENTS WERE PREPARED OR APPROVED BY ME, AND THAT I AM A DULY LICENSED PROFESSIONAL ENGINEER UNDER THE LAWS OF THE STATE OF MARYLAND.
LICENSE NO. 22765
EXPIRATION DATE 07/09/2024
01/25/2023
RK&K
700 EAST PRATT STREET, SUITE 500
BALTIMORE, MARYLAND 21202
800.787.3755

NO.	DESCRIPTION	BY	DATE
	REVISIONS		

TOWN OF EMMITSBURG, MARYLAND
NEW CREAMERY ROAD SEWAGE PUMP STATION
EMMITSBURG, MARYLAND

MECHANICAL IMPROVEMENT SECTION 2

ENGINEER	CHECKED BY
JSG	RAL
DRAWN BY	DATE
TRM	1/2023
RK&K PROJECT NUMBER	
19082	

DRAWING NUMBER
M8
SHEET NO. 28 OF 60

RK\21\SYS - \\ad.rkk.com\fs\Cloud\Projects\2019\19082_Creamery\PS\Civil\Plans\Mech\19082PS-028-MP-M8.dwg Jan 27, 2023 - 8:35am Plot Scale 1:1

CENTRIFUGAL SQUARE INLINE FAN SCHEDULE

ID	SERVICE	LOCATION	DRIVE	CFM	S.P. (IN W.G.)	FAN RPM	MOTOR HP	VOLTAGE/ PHASE	SOUND (MAX AT 5 FEET)	NOTES	MANUFACTURER & MODEL NO.
SF1	SUPPLY	PUMP ROOM	BELT	1,200	0.33	1328	0.33	460/3	58 dBA	7,11,12,13,14,17, 19,21,25,26,27,28	LOREN COOK MODEL NO. 150SQN-HP, OR APPROVED EQUAL
EF2	EXHAUST	PUMP ROOM	BELT	1,200	0.33	1084	0.33	460/3	55 dBA	7,9,12,14,17, 19,21,25,26,27,28	LOREN COOK MODEL NO. 135SQN-B, OR APPROVED EQUAL

NOTES:

1. NEMA 4 DISCONNECT
2. GRAVITY BACKDRAFT DAMPER
3. MOTORIZED BACKDRAFT DAMPER
4. SIDE DISCHARGE PACKAGE
5. DUEL SIDE DISCHARGE PACKAGE
6. BELT GUARD
7. OSHA GUARD/MOTOR COVER
8. INSULATED HOUSING
9. INLET GUARD
10. OUTLET GUARD
11. INLET FLEXIBLE CONNECTOR
12. OUTLET FLEXIBLE CONNECTOR
13. FLANGED INLET CONNECTION WITH COMPANION FLANGE
14. FLANGED OUTLET CONNECTION WITH COMPANION FLANGE
15. CEILING MOUNTED RUBBER-IN-SHEAR INSULATORS
16. FLOOR MOUNTED RUBBER-IN-SHEAR INSULATORS
17. CEILING MOUNTED SPRING ISOLATORS
18. FLOOR MOUNTED SPRING ISOLATORS
19. LORENIZED COATING
20. EPOXY POWDER COATING
21. REINFORCED WHEEL
22. EXTERNAL INLET VANE DAMPER – ALUMINUM
23. FILTER BOX WITH ALUMINUM FILTER
24. FILTER BOX WITH 30% ALUMINUM FILTER
25. EXTENDED LUBE LINES
26. SPARE BELT KIT
27. BELT TENSIONER-ROTARY
28. THERMOSTATICALLY CONTROLLED

FIBERGLASS DUCT AXIAL FAN SCHEDULE

ID	SERVICE	LOCATION	DRIVE	CFM	S.P. (IN W.G.)	FAN RPM	MOTOR HP	VOLTAGE/ PHASE	SOUND (MAX AT 5 FEET)	NOTES	MANUFACTURER & MODEL NO.
EF1	EXHAUST	WETWELL TOP SLAB	BELT	3,250	1.5	2457	3.0	460/3	94 dBA	3,4,5,6,7 10,11,18	HARTZELL FAN INC. FRP DUCT AXIAL MODEL NO. A35-186E, OR APPROVED EQUAL

NOTES:

1. DISCONNECT SWITCH
2. VANE SECTION
3. 316 SS HARDWARE AND SHAFT
4. ACCESS DOOR
5. STATIC GROUNDING – CARBON/GRAPHITE IMPREGNATION
6. ALL VINYL ESTER CONSTRUCTION
7. SURFACE VEIL
8. FRP ROOF CURB
9. ROOF MOUNT
10. DUCT MOUNT
11. FIBERGLASS MOTOR COVER
12. HORIZONTAL MOUNTING ANGLES FOR SUSPENDED MOUNTING
13. VERTICAL MOUNTING FEET/ANGLES (FLOOR/CEILING MOUNTING)
14. HORIZONTAL BASE FOR FLOOR MOUNTING
15. VIBRATION ISOLATOR
16. INLET BELL
17. 316 SS INLET GUARD
18. EXPLOSION PROOF
19. INVERTER DUTY MOTOR

DUCTLESS MINI-SPLIT SYSTEM OUTDOOR UNIT SCHEDULE

MARK	LOCATION	RATED COOLING CAPACITY BTUH	RATED HEATING CAPACITY AT 47° F BTUH	SEER	ELECTRICAL DATA VOLTS/HZ/PHASE	MCA A	WEIGHT LBS	FAN DATA NO	FAN DATA CFM	FAN DATA F.L.A. A	REFRIGERANT TYPE	MANUFACTURER	MODEL	REMARKS
ODU1	OUTDOOR	22,400	27,600	20.5	208-230/60/1	17.1	119	1	1,701	0.93	R410A	MITSUBISHI	MUZ-GL24NA	1,2,3

REMARKS:
1. INSULATE REFRIGERANT PIPING.
2. WIND BAFFLE
3. MOUNTING BRACKET > 24" ABOVE GRADE

DUCTLESS MINI-SPLIT SYSTEM INDOOR UNIT SCHEDULE

	LOCATION	TOTAL COOLING CAPACITY	RATED HEATING CAPACITY AT 47° F BTUH	CFM	MCA A	FAN F.L.A. A	ELECTRICAL DATA VOLTS/HZ/PHASE	MANUFACTURER	MODEL	REMARKS
IDU1	ELECTRICAL ROOM	22,400	27,600	388-738	1.0	0.78	208-230/60/1	MITSUBISHI	MSZ-GL24NA	1,2.3

REMARKS:
1. INSTALLATION PLATE
2. REMOTE CONTROLLER HOLDER
3. WIRED REMOTE CONTROLLER

NOTES:

1. CONTRACTOR SHALL USE A WALL BRACKET AS PROVIDED BY THE DUCTLESS MINI-SPLIT MANUFACTURER TO MOUNT THE OUTDOOOR UNIT TO THE BUILDING WALL. WALL BRACKET SHALL BE ATTACHED TO THE BUILDING USING ANCHORS COMPATIBLE WITH WALL BRACKET AND SUPPORTING SUBSTRUCTURE.
2. CONDENSATE PIPING SHALL BE SCHEDULE 40 PVC AND SHALL BE INSTALLED AS SHORT AND DIRECT AS POSSIBLE TO THE OUTDOORS AND DOWN THE EXTERIOR WALL TO WITHIN 3 INCHES OF FINISHED GRADE.
3. CONTRACTOR SHALL INSTALL THE CONTROL AND POWER WIRES BETWEEN THE WIRED REMOTE CONTROLLER, THE INDOOR UNIT, AND OUTDOOR UNIT AS DIRECT AS POSSIBLE. SEE DWG. NO. E7 FOR INSTALLATION OF NEW ELECTRICAL COMPONENTS AND PANELS.

DAMPER SCHEDULE

ID	SIZE (INCHES)	DEPTH (INCHES)	MATERIAL	NOTES	TYPE	REMARKS
D1	20" x 20"	4	ALUMINUM	1,3,4,6,7,9	THIN LINE CONTROL DAMPER	OPEN WHEN SUPPLY FAN SF1 IS OPERATING, OTHERWISE CLOSED
D2	18" x 18"	4	ALUMINUM	1,3,4,7,9	THIN LINE CONTROL DAMPER	OPEN WHEN SUPPLY FAN EF2 IS OPERATING, OTHERWISE CLOSED

NOTES:
1. CLEAR ANODIZED FINISH
2. PNEUMATIC ACTUATOR
3. ELECTRIC ACTUATOR
4. ACTUATOR MOUNTING BRACKET
5. SWITCH PACKAGE
6. FRONT FLANGE FRAME
7. REAR FLANGE FRAME
8. SPRING LOADED OPEN
9. SPRING LOADED CLOSED

PUMP SCHEDULE

ID	DESCRIPTION	LOCATION	Q (GPM)	TDH (FT)	RPM	REMARKS
P1	PUMP #1	PUMP ROOM	1,650	98	1,325	NEW BASE-MOUNTED PUMP
P2	PUMP #2	PUMP ROOM	1,650	98	1,325	NEW BASE-MOUNTED PUMP
P3	PUMP #3	PUMP ROOM	1,650	98	1,325	NEW BASE-MOUNTED PUMP
P4	PUMP #4	SUMP PIT	67	17	3,450	NEW SUMP PUMP

ALL DIMENSIONS AND EXISTING CONDITIONS SHALL BE CHECKED AND VERIFIED BY THE CONTRACTOR AT THE SITE.

UNIT HEATER SCHEDULE

ID	SIZE (H X W X D)	KW	MOUNTING HEIGHT	NOTES	MANUFACTURER & MODEL NO.
UH1	19½" X 13" X 18"	10	7'-0" AFF	1,2,4	QMARK MODEL QWD-10

NOTES:
1. PROVIDE INTEGRAL THERMOSTAT
2. MOUNTING HEIGHT IS TO BOTTOM OF UNIT
3. PROVIDE INTEGRAL DISCONNECT
4. SEE ELECTRICAL DRAWINGS FOR CONNECTION REQUIREMENTS

SLUICE GATE SCHEDULE

ID.	SIZE	DESCRIPTION	MOUNTING
SG1	18" x 18"	WETWELL INFLUENT	BOLT TO WALL

NOTE:
1. THE SELF CONTAINED SLUICE GATE YOKE SHALL BE EITHER INSTALLED AT AN ELEVATION TO PERMIT FULL OPENING OF SLUICE GATE OR ABOVE THE HWA ELEVATION, WHICHEVER IS GREATER.

ACCESS HATCH SCHEDULE

ID.	SLAB OPENING	CLEAR OPENING	DESCRIPTION	REMARKS
H1	44" X 44"	40" X 43"	WETWELL TOP SLAB	NEW GENERAL PURPOSE ACCESS HATCH
H2	36" X 42"	35" X 38"	WETWELL TOP SLAB	NEW GENERAL PURPOSE ACCESS HATCH
H3	36" X 42"	35" X 38"	VALVE VAULT TOP SLAB	NEW GENERAL PURPOSE ACCESS HATCH

NOTE:
1. CONTRACTOR SHALL VERIFY HATCH SIZE AND LOCATION WILL PERMIT REMOVAL/INSTALLATION OF EQUIPMENT WITHIN THE VALVE VAULT AND WETWELL. HATCH SIZE IS DEPENDENT UPON ACTUAL EQUIPMENT FURNISHED.

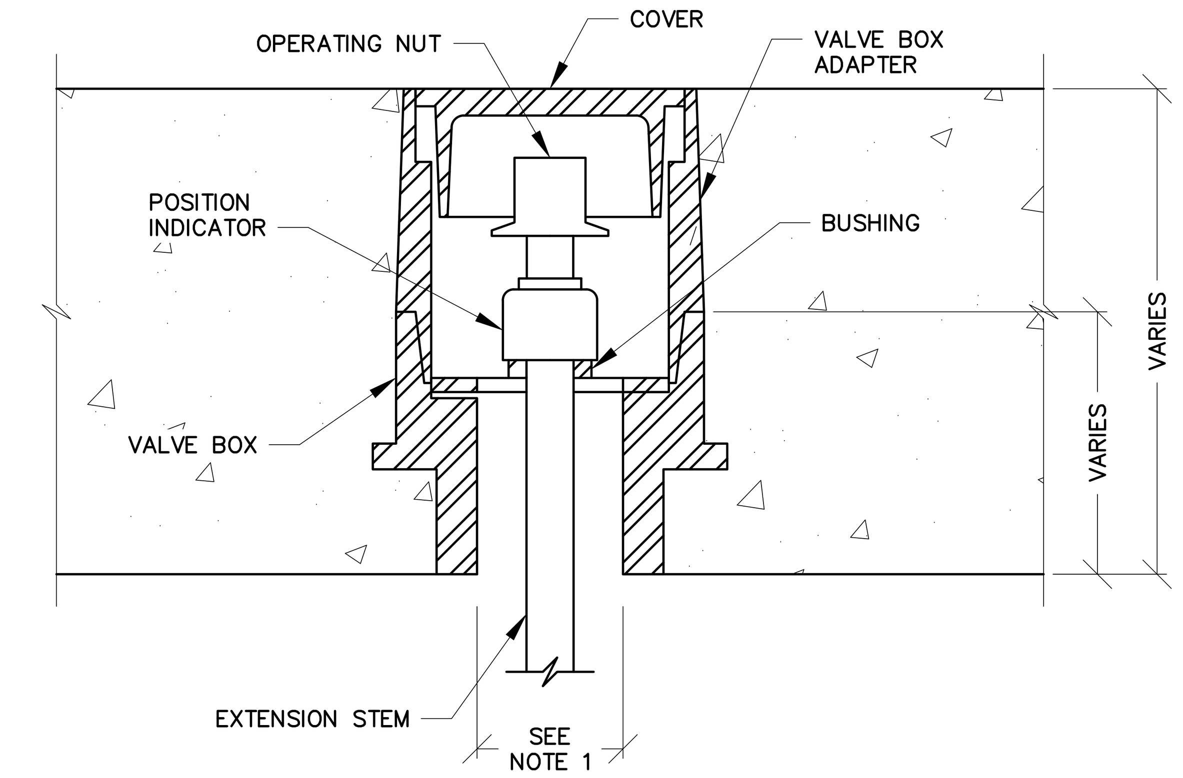

TYPICAL VALVE BOX INSTALLATION DETAIL
NTS

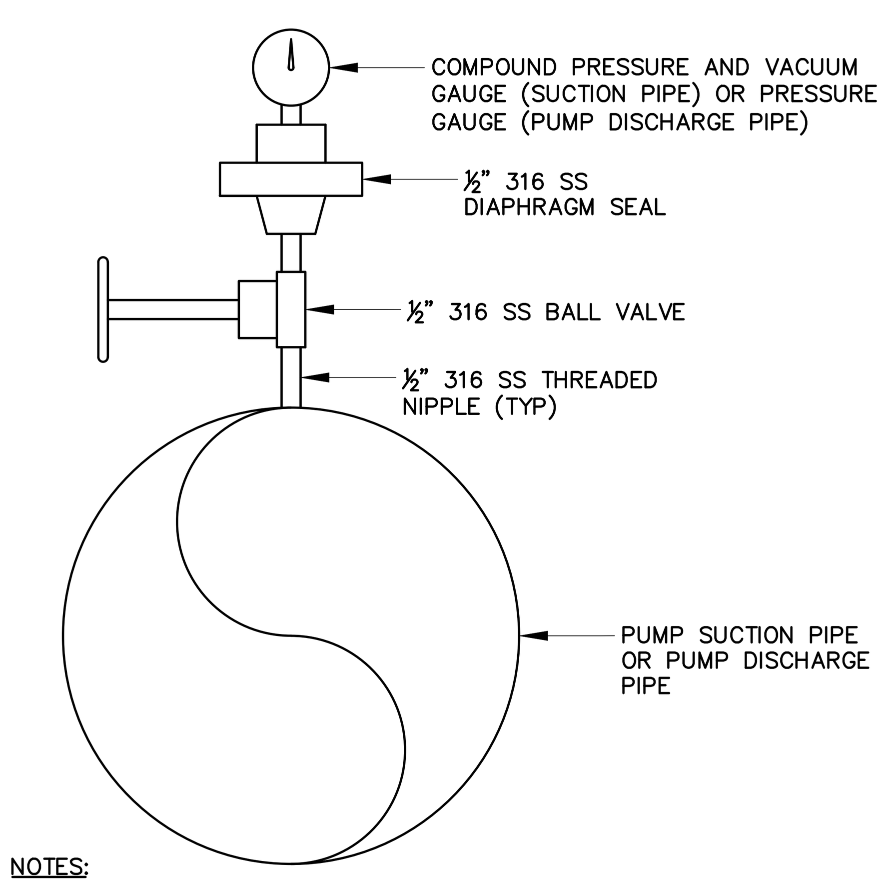

NOTES:
1. CONTRACTOR SHALL INSTALL COMPOUND PRESSURE AND VACUUM GAUGE ON THE SUCTION PIPING FOR EACH PUMP.
2. CONTRACTOR SHALL INSTALL PRESSURE GAUGE ON THE DISCHARGE PIPING FOR EACH PUMP.

TYPICAL PUMP PIPING GAUGE DETAIL
NTS

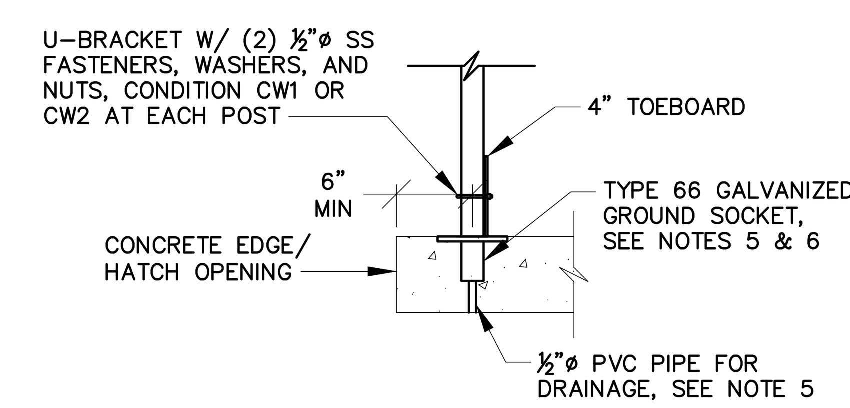

CONCRETE BASE FITTING

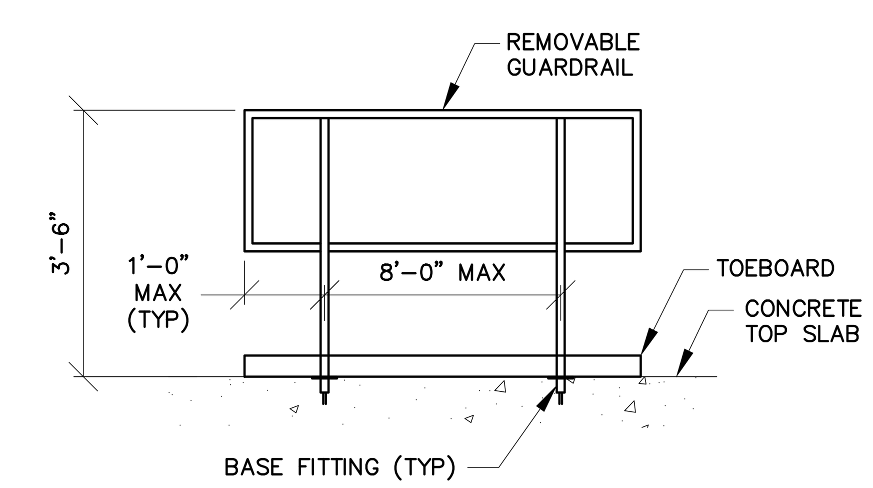

ELEVATION

NOTES:

1. REMOVABLE RAILING SYSTEM SHALL MEET OSHA STANDARDS 29 CFR 1910.29. CONTRACTOR SHALL SUBMIT SUPPORTING DATA, LAYOUT DRAWINGS FOR EACH HATCH, AND CERTIFICATION OF OSHA COMPLIANCE FOR REVIEW AND APPROVAL.
2. REMOVABLE GUARDRAILS SHALL CONSIST OF TOP AND MID RAILS, POSTS AND FITTINGS. POSTS AND RAILS SHALL BE A MINIMUM OF 1¼"ø SCHEDULE 40 ALUMINUM PIPE, AND RAIL FITTINGS SHALL BE ALUMINUM. RAILING SYSTEMS SHALL BE MILL FINISH, AND SHALL BE FROM SAFETY RAIL SOURCE, LLC, 1-877-723-3766, OR APPROVED EQUAL.
3. THE LOWER 6" OF EACH POST SHALL BE COATED SUCH THAT A BARRIER BETWEEN DISSIMILAR METALS IS PROVIDED. ACCEPTABLE MATERIALS ARE BITUMINOUS PAINT, MYLAR ISOLATORS, OR APPROVED EQUAL.
4. METAL SURFACES THAT WILL BE IN CONTACT WITH CONCRETE SHALL BE COATED WITH BITUMINOUS PAINT.
5. WITH THE EXCEPTION OF THE WETWELL, GROUND SOCKETS FOR ALL OUTDOOR GUARDRAIL SYSTEMS SHALL HAVE A ½"ø WEEP HOLE IN THE BOTTOM OF THE SOCKET FOR DRAINAGE PURPOSES. DO NOT PROVIDE WEEP HOLES FOR DRAINAGE FOR WETWELL GUARDRAIL SYSTEMS.
6. ALL GROUND SOCKETS SHALL BE PROVIDED WITH REMOVABLE PLUGS.
7. TWO ROWS OF 316 SS SAFETY CHAIN SHALL BE PROVIDED ON THE OPEN SIDE OF THE GUARDRAIL SYSTEM. SAFETY CHAIN ELEVATIONS SHALL MATCH THE ADJACENT TOP AND MID RAIL ELEVATIONS.

TYPICAL REMOVABLE GUARDRAIL DETAIL
NTS

01/25/2023

PROFESSIONAL CERTIFICATION

I HEREBY CERTIFY THAT THESE DOCUMENTS WERE PREPARED OR APPROVED BY ME, AND THAT I AM A DULY LICENSED PROFESSIONAL ENGINEER UNDER THE LAWS OF THE STATE OF MARYLAND.
LICENSE NO. 22765 EXPIRATION DATE 07/09/2024

RK&K
700 EAST PRATT STREET, SUITE 500
BALTIMORE, MARYLAND 21202
800.787.3755

NO.	DESCRIPTION	BY	DATE

REVISIONS

TOWN OF EMMITSBURG, MARYLAND
NEW CREAMERY ROAD SEWAGE PUMP STATION
EMMITSBURG, MARYLAND

MECHANICAL SCHEDULES AND DETAILS

ENGINEER	CHECKED BY
JSG	RAL
DRAWN BY	DATE
TRM	1/2023

RK&K PROJECT NUMBER 19082

DRAWING NUMBER
M9

RKK21\SYS – \\ad.rkk.com\fs\Cloud\Projects\2019\19082_CreameryPS\Cadd\Plans\Mech\19082CR-029-MP-M9.dwg Jan 27, 2023 – 8:36am Plot Scale 1:1

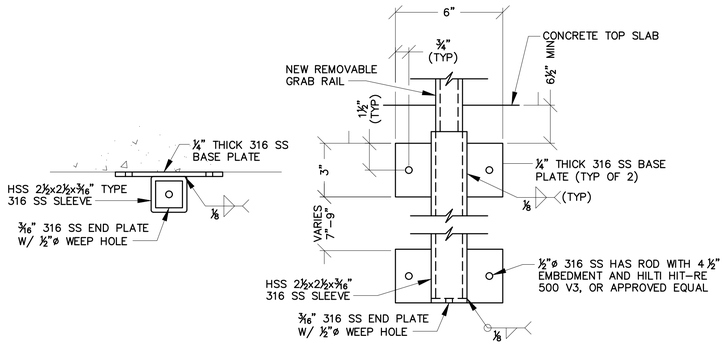

PLAN ELEVATION

NOTE:

1. BASE PLATES SHALL BE POSITIONED SO THAT THE ANCHOR RODS ARE A MINIMUM OF 4" CLEAR OF ANY CONCRETE JOINTS.

REMOVABLE GRAB RAIL SIDE MOUNT DETAIL (A; C5, M10, M6)
NTS

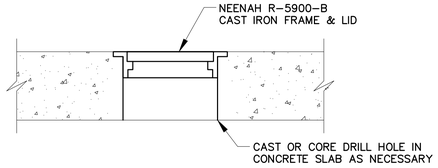

NOTE:

1. CONTRACTOR SHALL ENSURE TOP OF LID AND SLAB FRAME ARE FLUSH WITH CONCRETE FLOOR.

TRANSDUCER ACCESS COVER DETAIL (B; M5, M10, M7)
NTS

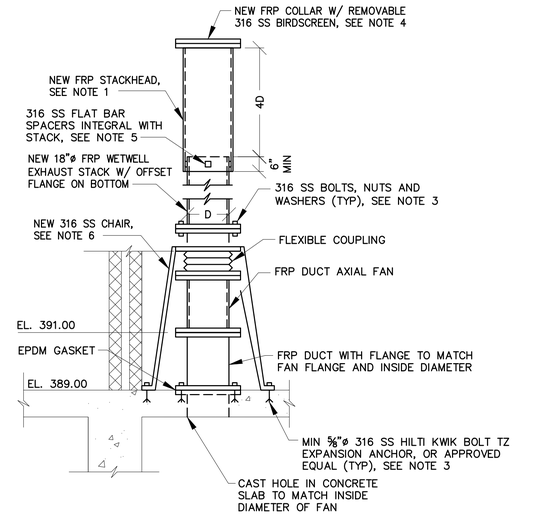

NOTES:

1. INTERIOR DIAMETER OF STACKHEAD SHALL BE 1–INCH LARGER THAN THE OUTSIDE DIAMETER OF THE STACK.
2. STACK AND STACKHEAD SHALL BE FREE STANDING, MEETING THE REQUIREMENTS SPECIFIED.
3. BOLTS SHALL BE OF SUFFICIENT NUMBER, LENGTH, AND DIAMETER TO TRANSFER APPLIED LOADS TO THE STRUCTURE, AND MEET ALL OF THE REQUIREMENTS SPECIFIED.
4. BIRDSCREEN SHALL BE ½" MESH WELDED SS T316 – 0.063 WIRE DIAMETER AS MANUFACTURED BY TWP INC., OR APPROVED EQUAL.
5. FLAT BAR SPACERS SHALL BE OF SUFFICIENT SIZE AND NUMBER TO TRANSFER ALL STACKHEAD LOADS TO THE STACK, WITHOUT IMPEDING DRAINAGE.
6. CHAIR SHALL BE OF SUFFICIENT SIZE AND STRENGTH TO SUPPORT THE LOADS APPLIED BY THE FRP STACK, AND SHALL ALLOW THE REMOVAL/INSTALLATION OF FAN WITHOUT REMOVING THE STACK.

18" FRP EXHAUST STACK DETAIL (C; M5, M10, M7)
NTS

SUMP PUMP CONTROL LEVELS

LEAD PUMP ON EL.	378.00
LEAD PUMP OFF EL.	377.00

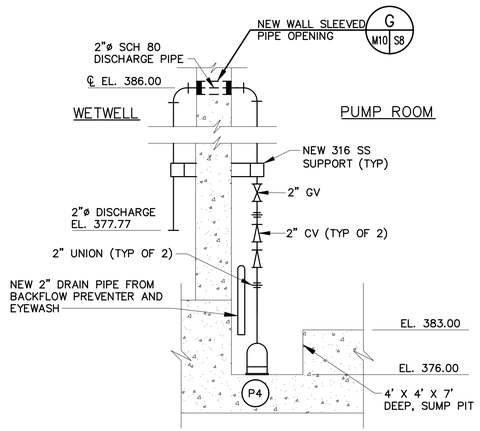

SUMP PUMP DISCHARGE PIPING SCHEMATIC (D; M6, M10, M8)
NTS

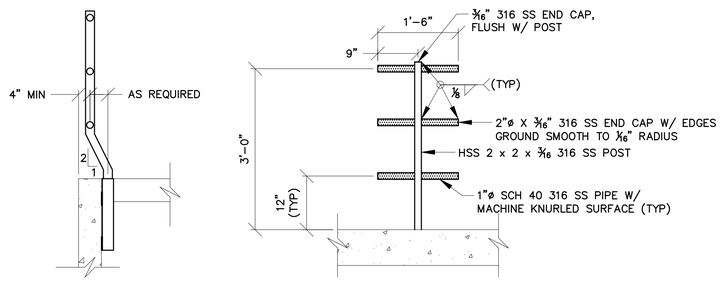

NOTE:

1. CONTRACTOR SHALL FIELD VERIFY INGRESS/EGRESS, INCLUDING LOCATION OF MANHOLE STEPS, LADDER RUNGS, ETC., AND SHALL FIELD MEASURE FOR ALL COMPONENTS PRIOR TO SUBMITTING. FOR MEANS OF INGRESS/EGRESS, THE CONTRACTOR SHALL BE RESPONSIBLE FOR COORDINATING ALL COMPONENTS TO PROVIDE A SAFE WORKING SYSTEM PRIOR TO SUBMITTING.

TYPICAL REMOVABLE GRAB RAIL DETAIL
NTS

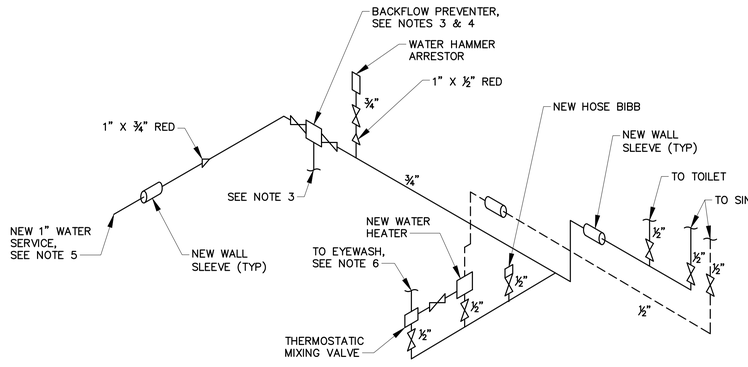

LEGEND

COLD WATER ————

HOT WATER – – – – – –

POTABLE WATER NOTES:

1. ALL PIPE, VALVES, FITTINGS AND DEVICES SHOWN IN SCHEMATIC TO BE NEW, UNLESS SHOWN OTHERWISE. CONTRACTOR SHALL CONNECT ALL FIXTURES TO WATER SERVICE.
2. GATE VALVES SHALL BE INSTALLED IN CLOSE PROXIMITY TO ALL PLUMBING FIXTURES.
3. INSTALL DRAIN PIPING FROM BACKFLOW PREVENTER TO EYEWASH DRAIN PIPING.. DRAIN PIPING SHALL NOT INTERFERE WITH OTHER EQUIPMENT OR OPERATIONS. MANUFACTURER SUPPLIED AIR GAP FITTING SHALL BE INSTALLED BETWEEN THE BACKFLOW PREVENTER AND THE DRAIN PIPING.
4. INSTALL BACKFLOW PREVENTER IN AN ACCESSIBLE LOCATION FOR MAINTENANCE.
5. CONTRACTOR SHALL CONNECT TO EXISTING WATER SERVICE.
6. CONNECT TO EYEWASH IN ACCORDANCE WITH IBC PLUMBING CODE, INCLUDING PROVIDING A DRAIN TRAP. EYEWASH DRAIN PIPING SHALL DRAIN TO THE SUMP PIT.
7. COORDINATE THE FLOOR AND WALL SLEEVE LOCATIONS WITH ALL EQUIPMENT AND SUBMIT A WATER PIPING LAYOUT DRAWING TO THE ENGINEER FOR REVIEW.

POTABLE WATER RISER DIAGRAM
NTS

ALL DIMENSIONS AND EXISTING CONDITIONS SHALL BE CHECKED AND VERIFIED BY THE CONTRACTOR AT THE SITE.

PROFESSIONAL CERTIFICATION
I HEREBY CERTIFY THAT THESE DOCUMENTS WERE PREPARED OR APPROVED BY ME, AND THAT I AM A DULY LICENSED PROFESSIONAL ENGINEER UNDER THE LAWS OF THE STATE OF MARYLAND.
LICENSE NO. 22765
EXPIRATION DATE 07/09/2024
01/25/2023

RK&K
700 EAST PRATT STREET, SUITE 500
BALTIMORE, MARYLAND 21202
800.787.3755

NO.	DESCRIPTION	BY	DATE
	REVISIONS		

TOWN OF EMMITSBURG, MARYLAND
NEW CREAMERY ROAD SEWAGE PUMP STATION
EMMITSBURG, MARYLAND

MECHANICAL DETAILS

ENGINEER	CHECKED BY
JSG	RAL
DRAWN BY	DATE
TRM	1/2023
RK&K PROJECT NUMBER	
19082	

DRAWING NUMBER
M10
SHEET NO. 30 OF 60

RK&K 21.5"S – \\cd-kk.com\Us\Cloud\Projects\2019\19082_Creamery#S\Civil\Plans\Mech\19082SR-A30-MP-M10.dwg Jan 27, 2023 - 8:15pm Plot Scale 1:1

STRUCTURAL GENERAL NOTES:

SPECIFICATIONS
FOR MATERIAL SPECIFICATIONS, SEE CONTRACT SPECIFICATIONS AND SPECIAL PROVISIONS.

DESIGN CRITERIA
A. INTERNATIONAL BUILDING CODE, 2018
B. ACI 318–14 "BUILDING CODE REQUIREMENTS FOR STRUCTURAL CONCRETE".
C. ACI 350–06 "CODE REQUIREMENTS FOR ENVIRONMENTAL ENGINEERING CONCRETE STRUCTURES".
D. ACI 350.3–06 "SEISMIC DESIGN OF LIQUID–CONTAINING CONCRETE STRUCTURES".
E. ANSI/AISC 360–10 "SPECIFICATIONS FOR STRUCTURAL STEEL BUILDINGS".
F. ASCE 7–16, "MINIMUM DESIGN LOADS FOR BUILDINGS AND OTHER STRUCTURES".
G. AWS D1.1 "STRUCTURAL WELDING CODE – STEEL", LATEST EDITION.
H. BUILDING DESIGN IS BASED ON THE SHORED CONSTRUCTION METHOD.

LOADINGS

A. DEAD LOADS	
– CONCRETE	150 PCF
– BUILDING MATERIALS	ACTUAL LOAD OF MATERIALS
B. LIVE LOADS	
– GRATING LOADS	150 PSF
– TRUCK	HS25 AASHTO
– STAIRS	100 PSF OR 1,000 LB
– EQUIPMENT PLATFORMS	250 PSF (UNO)
– STORAGE	250 PSF (UNO)
– LIQUID	65 PCF
– HANDRAIL/RAILING	200 LBS OR 50 PLF IN ANY DIRECTION
C. WIND LOADS	
– ULTIMATE DESIGN WIND SPEED	118 MPH
– RISK CATEGORY	III
– DESIGN WIND PRESSURE	27.3 PSF
D. SEISMIC LOADS	
– RISK CATEGORY	III
– SEISMIC IMPORTANCE FACTOR, Ie	1.50
– MAPPED SPECTRAL RESPONSE ACCELERATION PARAMETERS	
Ss	0.131g
S1	0.042g
– SITE CLASS	E
– DESIGN SPECTRAL RESPONSE ACCELERATION PARAMETERS	
SDS	0.209g
SD1	0.119g
– SEISMIC DESIGN CATEGORY	B
– BASIC SEISMIC FORCE RESISTING SYSTEM	VARIES
– DESIGN BASE SHEAR	VARIES
– SEISMIC RESPONSE COEFFICIENT	
Ci	VARIES
Cc	VARIES
– RESPONSE MODIFICATION COEFFICIENT	
Ri	VARIES
Rc	1.00
E. GROUND SNOW LOADS	30 PSF

CONCRETE
A. ALL STRUCTURAL CONCRETE SHALL BE NORMAL WEIGHT, HAVING A MINIMUM 28–DAY COMPRESSIVE STRENGTH OF 4,500 PSI.
B. ALL CONCRETE SHALL BE CONSTRUCTED IN ACCORDANCE WITH ACI 301 "SPECIFICATIONS FOR STRUCTURAL CONCRETE", UNLESS OTHERWISE SPECIFIED.
C. REINFORCED CONCRETE STRUCTURES SHALL CONFORM TO THE PROVISIONS OF THE CURRENT "BUILDING CODE REQUIREMENTS FOR STRUCTURAL CONCRETE" (ACI 318–14), "SPECIFICATIONS FOR STRUCTURAL CONCRETE" (ACI 301–16), AND "CODE REQUIREMENTS FOR ENVIRONMENTAL ENGINEERING CONCRETE STRUCTURES" (ACI 350–06).
D. UNLESS OTHERWISE NOTED ON THE DRAWINGS, JOINTS SHOWN SHALL BE CONSTRUCTION JOINTS. CONSTRUCTION JOINTS SHALL BE AS DETAILED, AND NO ADDITIONAL JOINTS SHALL BE USED NOR ANY OMITTED EXCEPT BY WRITTEN AUTHORIZATION OF THE ENGINEER. CONTRACTOR SHALL SUBMIT THE LOCATION OF PROPOSED CONSTRUCTION JOINTS THAT ARE NOT SHOWN ON THE DRAWINGS FOR APPROVAL. ENGINEER APPROVED ADDITIONAL CONSTRUCTION JOINTS SHALL NOT RESULT IN ADDITIONAL EXPENSE TO THE OWNER.
E. CONTRACTOR SHALL COORDINATE LOCATION OF JOINTS SHOWN WITH PIPE OPENINGS, EQUIPMENT AND REINFORCING STEEL LAP REQUIREMENTS. NUMBER OF CONSTRUCTION JOINTS SHOWN IS A MINIMUM.
F. WATERSTOPS
   1) PROVIDE WATERSTOPS AT ALL EXPANSION, CONTRACTION AND CONSTRUCTION JOINTS LOCATED IN SLABS, EXTERIOR WALLS, AND WALLS IN CONTACT WITH FLUID AND/OR SOIL.WATERSTOPS SHALL FORM A CONTINUOUS WATERTIGHT DIAPHRAGM TO PREVENT LEAKAGE.
   2) TERMINATE VERTICAL WATERSTOPS THREE INCHES BELOW TOP OF CONCRETE WALLS IN OPEN TANKS, AT THE UNDERSIDE OF ELEVATED FRAMED SLABS THAT ARE ABOVE MAXIMUM WATER SURFACE ELEVATIONS AND ABOVE FINISHED GRADE IN EXTERIOR FOUNDATION WALLS.
   3) USE FACTORY–MADE CROSSES, TEES AND ELLS AT ALL CORNERS AND INTERSECTIONS.
   4) INSTALL WATERSTOPS IN CONTINUOUS LENGTHS TO MINIMIZE FIELD SPLICES.
   5) PROVIDE 2–INCH MINIMUM CLEARANCE BETWEEN WATERSTOPS AND REINFORCING STEEL AND OTHER EMBEDDED ITEMS.
   6) SECURE WATERSTOPS IN POSITION WITH WIRE TIES TO ADJACENT REINFORCING STEEL ON BOTH SIDES, ALONG EACH EDGE AS SPECIFIED.
   7) PROVIDE HYDROPHILIC WATERSTOPS ONLY WHERE INDICATED ON THE DRAWINGS.
   8) PROTECT EXPOSED WATERSTOP FROM DAMAGE.
G. THE EXTERIOR OF ALL BURIED WALLS SHALL BE WATERPROOFED AND DAMPPROOFED.
H. ALLOW 48 HOURS MINIMUM CURING TIME BETWEEN PLACEMENT OF ADJACENT CONCRETE POURS.
I. CHAMFER ALL EXPOSED EDGES 3/4" X 3/4". CHAMFER REQUIRED UNLESS NOTED OTHERWISE IN DRAWINGS.
J. SEE CIVIL, MECHANICAL, AND ELECTRICAL DRAWINGS FOR ALL EMBEDDED ITEMS SUCH AS SCREWS, ANCHORS, ELECTRICAL CONDUITS, OPENINGS, ETC. WHICH MAY INTERFERE WITH CONCRETE CONSTRUCTION. CONDUITS AND EMBEDDED PIPES SHALL BE INSTALLED IN ACCORDANCE WITH THE REQUIREMENTS OF ACI 318 AND ACI 350.
K. STRUCTURAL CONCRETE SHALL CONTAIN A WATER REDUCING ADMIXTURE AND A CORROSION–INHIBITING ADMIXTURE.
L. STRUCTURES SHALL BE WATERTIGHT. SEE SPECIFICATIONS FOR WATERTIGHTNESS TESTING REQUIREMENTS.
M. CONDUIT, PIPES, OR ITEMS OTHER THAN THOSE SPECIFIED ARE NOT TO BE EMBEDDED IN CONCRETE OF WATER BEARING STRUCTURES UNLESS SPECIFICALLY SHOWN IN THE CONTRACT DOCUMENTS, OR BY WRITTEN APPROVAL BY THE ENGINEER.
N. STRUCTURAL CONCRETE FOR THE WETWELL AND DRYWELL SHALL HAVE A 21–DAY DRYING SHRINKAGE OF 0.028 PERCENT OR LESS AND A 28–DAY DRYING SHRINKAGE OF 0.032 PERCENT OR LESS WHEN TESTED IN ACCORDANCE WITH ASTM C157, AS MODIFIED BY THE PROJECT SPECIFICATIONS.
O. STRUCTURAL CONCRETE FOR THE WETWELL AND DRYWELL SHALL CONTAIN A SHRINKAGE REDUCING ADMIXTURE AND AN INTEGRAL CRYSTALLINE WATERPROOFING ADMIXTURE.

REINFORCING STEEL
A. ALL REINFORCING STEEL SHALL CONFORM TO ASTM A615, GRADE 60.
B. CONCRETE COVER FOR REINFORCING STEEL SHALL BE AS FOLLOWS, UNLESS NOTED OTHERWISE ON THE DRAWINGS:
   1. UNFORMED CONCRETE BOTTOM BARS IN FOOTINGS AND SLABS ON EARTH, GRAVEL OR CRUSHED STONE.........3"
   2. ALL OTHER CONCRETE SURFACES...........2"
C. WELDED WIRE REINFORCEMENT SHALL CONFORM TO ASTM A1064 – LATEST EDITION. THE REINFORCEMENT SHALL BE FURNISHED IN FLAT SHEETS.
D. ALL SPLICES SHALL BE CLASS B, TENSION LAPS UNLESS OTHERWISE NOTED ON THE PLANS. LAP SPLICE LENGTHS SHALL BE AS SHOWN IN THESE PLANS.
E. DO NOT WELD OR TACK REINFORCING STEEL.
F. REINFORCING STEEL, BAR SUPPORTS, AND SPACERS SHALL BE DETAILED IN ACCORDANCE WITH ACI 315–LATEST EDITION, "DETAILS AND DETAILING OF CONCRETE REINFORCEMENT", EXCEPT WHERE SHOWN OTHERWISE.
G. ALL WELDED WIRE REINFORCEMENT SHALL BE SPLICED SO THAT THE OVERLAP OF THE OUTERMOST CROSS WIRES OF EACH ADJOINING SHEET IS NOT LESS THAN THE SPACING OF THE CROSS WIRES PLUS TWO INCHES, UNLESS NOTED OTHERWISE.
H. LAP CONTINUOUS BOTTOM REINFORCEMENT AT SUPPORTS AND CONTINUOUS TOP REINFORCEMENT AT THE CENTER OF SPAN IN ELEVATED SLABS AND BEAMS, UNLESS OTHERWISE INDICATED.
I. LAP CONTINUOUS BOTTOM REINFORCEMENT AT THE CENTER OF A SPAN AND CONTINUOUS TOP REINFORCEMENT AT SUPPORTS IN FOUNDATION MATS AND BASE SLABS, UNLESS OTHERWISE INDICATED.
J. THE CONTRACTOR SHALL SUBMIT SHOP DRAWINGS OF REINFORCING STEEL PRIOR TO PROCEEDING WITH FABRICATION.

STRUCTURAL STEEL
A. MATERIALS SHALL CONFORM TO THE FOLLOWING AND AS SPECIFIED:
   1. W–SHAPES ASTM A992 GRADE 50
   2. SHAPES AND PLATES ASTM A36
   3. ANCHOR BOLTS ASTM F1554 GRADE 55
B. THE CONTRACTOR SHALL SUBMIT ERECTION PLANS AND SHOP DRAWINGS BEFORE PROCEEDING WITH FABRICATION.
C. ALL SHOP CONNECTIONS SHALL BE BOLTED OR WELDED WITH E70XX ELECTRODES, OR AS SPECIFIED. ALL FIELD CONNECTIONS SHALL BE HIGH STRENGTH BOLTED JOINTS, TYPE ST, EXCEPT WHERE NOTED. BOLTS SHALL BE ASTM F 3125, GRADE A325, TYPE 1 AND CERTIFIED AS NOT TO BE COUNTERFEIT.
D. SHOP SIDE OF CONNECTION ANGLES MAY BE FILLET WELDED ALL AROUND RESULTING IN CONNECTIONS OF EQUAL STRENGTH WITH A BOLTED CONNECTION.
E. PAINTING OF STRUCTURAL STEEL SHALL BE IN ACCORDANCE WITH THE PROJECT SPECIFICATIONS.
F. WELDING SHALL BE IN ACCORDANCE WITH AWS AND SHALL BE PERFORMED BY CERTIFIED WELDERS.
G. NO PENETRATIONS ARE PERMITTED THROUGH STRUCTURAL STEEL MEMBERS.
H. APPROVAL OF THE ENGINEER SHALL BE MANDATORY FOR THE USE OF CUTTING TORCH IN THE FIELD.
I. ALL GROUT UNDER STEEL MEMBERS SHALL BE NON–SHRINK "PRE–MIX" TYPE AND SHALL HAVE A MINIMUM COMPRESSIVE STRENGTH OF 5,000 PSI, UNLESS OTHERWISE NOTED OR SPECIFIED.
J. FOR ALL MISCELLANEOUS STEEL CONSTRUCTION NOT SHOWN ON STRUCTURAL DRAWINGS, SEE MECHANICAL DRAWINGS.
K. STEEL TEMPLATES SHALL BE USED TO SET ANCHOR BOLTS PLUMB AND MAINTAIN PROPER LOCATIONS WHEN PLACING CONCRETE.

J. FOR ALL MISCELLANEOUS STEEL CONSTRUCTION NOT SHOWN ON STRUCTURAL DRAWINGS, SEE MECHANICAL DRAWINGS.
K. STEEL TEMPLATES SHALL BE USED TO SET ANCHOR BOLTS PLUMB AND MAINTAIN PROPER LOCATIONS WHEN PLACING CONCRETE.

STAINLESS STEEL
A. MATERIALS SHALL CONFORM TO THE FOLLOWING:
   1. BOLTED CONNECTIONS ASTM F593 TYPE 316, CONDITION SH1 OR SH2
   2. WELDED CONNECTIONS ASTM A276 TYPE 308 OR TYPE 309
   3. SHEET, STRIP, PLATE, AND FLAT BARS ASTM A666 TYPE 316L

POST–INSTALLED ANCHORS AND POST–INSTALLED REINFORCING STEEL
A. EXCEPT WHERE INDICATED ON THE DRAWINGS, POST–INSTALLED ANCHORS SHALL CONSIST OF THE FOLLOWING ANCHOR TYPES AS PROVIDED BY HILTI, INC., OR APPROVED EQUAL. CONTACT HILTI AT (800) 879–8000 FOR PRODUCT RELATED QUESTIONS.
   1. ANCHORAGE TO CONCRETE
   a. ADHESIVE ANCHORS FOR CRACKED AND UNCRACKED CONCRETE USE:
   i. HILTI HIT–HY 200 SAFE SET SYSTEM WITH THE HILTI HIT–Z ROD PER ICC ESR–3187
   ii. HILTI HIT–HY 200 SAFE SET SYSTEM WITH HILTI HOLLOW DRILL BIT (TE–CD OR TE–YD) AND VC 20/40 VACUUM (VC 20–U OR VC 40–U) SYSTEM WITH HAS–E THREADED ROD PER ICC ESR–3187
   iii. HILTI HIT–RE 500 V3 SAFE SET SYSTEM WITH HILTI HOLLOW DRILL BIT (TE–CD OR TE–YD) AND VC 20/40 VACUUM (VC 20–U OR VC 40–U) WITH HAS–E THREADED ROD PER ICC ESR–3814
   iv. HILTI HIT–RE 500 V3 SAFE SET SYSTEM WITH HILTI ROUGHENING TOOL (TE–YRT) WITH HAS–E THREADED ROD PER ICC ESR–3814 FOR DIAMOND CORED HOLES
   b. MEDIUM DUTY MECHANICAL ANCHORS FOR CRACKED AND UNCRACKED CONCRETE USE:
   i. HILTI KWIK HUS EZ AND KWIK HUS EZ–I SCREW ANCHORS PER ICC ESR–3027
   ii. HILTI KWIK BOLT–TZ EXPANSION ANCHORS PER ICC ESR–1917
   c. HEAVY DUTY MECHANICAL ANCHORS FOR CRACKED AND UNCRACKED CONCRETE USE:
   i. HILTI HAD UNDERCUT ANCHORS PER ICC ESR–1546
   ii. HILTI HSL–3 EXPANSION ANCHORS PER ICC ESR–1545
B. POST–INSTALLED REINFORCING STEEL BAR CONNECTIONS SHALL BE DESIGNED PER THE ACI 318 BUILDING CODE REQUIREMENTS FOR STRUCTURAL CONCRETE (ACI 318). POST–INSTALLED REINFORCING STEEL BAR CONNECTIONS SHALL CONSIST OF THE FOLLOWING EPOXY SYSTEMS AS PROVIDED BY HILTI, INC., OR APPROVED EQUAL. CONTACT HILTI AT (800) 879–8000 FOR PRODUCT RELATED QUESTIONS.
   1. REINFORCING STEEL DOWELING INTO CONCRETE
   a. POST–INSTALLED REINFORCING STEEL IN CONCRETE
   i. HILTI HIT–HY 200 SAFE SET SYSTEM WITH HILTI HOLLOW DRILL BIT (TE–CD OR TE–YD) AND VC 20/40 VACUUM (VC 20–U OR VC 40–U) SYSTEM WITH CONTINUOUSLY DEFORMED REINFORCING STEEL PER ICC ESR–3187
   ii. HILTI HIT–HY 500 V3 SAFE SET SYSTEM WITH HILTI HOLLOW DRILL BIT (TE–CD OR TE–YD) AND VC 20/40 VACUUM (VC 20–U OR VC 40–U) SYSTEM WITH CONTINUOUSLY DEFORMED REINFORCING STEEL PER ICC ESR–3814
   iii. HILTI HIT–RE 500 V3 SAFE SET SYSTEM WITH HILTI ROUGHENING TOOL (YE–YRT) WITH CONTINUOUSLY DEFORMED REINFORCING STEEL PER ICC ESR–3814 IN DIAMOND CORED HOLES.
C. ANCHOR CAPACITY USED IN DESIGN SHALL BE BASED ON THE TECHNICAL DATA PUBLISHED BY THE MANUFACTURER. SUBSTITUTION REQUESTS FOR ALTERNATE PRODUCTS MUST BE APPROVED IN WRITING BY THE STRUCTURAL ENGINEER OF RECORD PRIOR TO USE. CONTRACTOR SHALL PROVIDE CALCULATIONS DEMONSTRATING THAT THE SUBSTITUTED PRODUCT IS CAPABLE OF ACHIEVING THE PERFORMANCE VALUES OF THE SPECIFIED PRODUCT. SUBSTITUTIONS WILL BE EVALUATED BY THEIR HAVING AN ICC ESR SHOWING COMPLIANCE WITH THE RELEVANT BUILDING CODE FOR SEISMIC USE, LOAD RESISTANCE, INSTALLATION CATEGORY, AND AVAILABILITY OF COMPREHENSIVE INSTALLATION INSTRUCTIONS. ADHESIVE ANCHOR EVALUATION WILL ALSO CONSIDER CREEP, IN–SERVICE TEMPERATURE AND INSTALLATION TEMPERATURE.
D. THE DESIGN OF STRAIGHT POST–INSTALLED REINFORCING STEEL BARS SHALL BE PERFORMED PER THE DEVELOPMENT AND SPLICE REQUIREMENTS OF THE ACI 318 BUILDING CODE REQUIREMENTS FOR STRUCTURAL CONCRETE. THE POST–INSTALLED REINFORCING STEEL BAR SYSTEM IS AN ALTERNATIVE TO CAST–IN–PLACE REINFORCING STEEL BARS GOVERNED BY ACI 318 AND THE IBC.
E. THE EPOXY SYSTEM SHALL BE TESTED IN ACCORDANCE WITH THE ICC–ES ACCEPTANCE CRITERIA FOR POST–INSTALLED EPOXY ANCHORS IN CONCRETE ELEMENTS (AC308), TABLE 3.8. TECHNICAL DATA SHALL BE PUBLISHED IN AN ICC–ES EVALUATION SERVICE REPORT SHOWING COMPLIANCE WITH THE IBC.
   a. ICC–ES ESR–3814 FOR HILTI HIT–RE 500 V3 EPOXY ANCHORS AND POST–INSTALLED REINFORCING STEEL BAR CONNECTIONS IN CRACKED AND UNCRACKED CONCRETE.
   b. ICC–ES ESR–3187 FOR HILTI HIT HY–200 EPOXY ANCHORS AND POST–INSTALLED REINFORCING BAR CONNECTIONS IN CRACKED AND UNCRACKED CONCRETE.
F. INSTALL ANCHORS PER THE MANUFACTURER INSTRUCTIONS, AS INCLUDED IN THE ANCHOR PACKAGING.
G. OVERHEAD ADHESIVE ANCHORS MUST BE INSTALLED USING THE HILTI PROFIS SYSTEM.
H. POST–INSTALLED ANCHORS AND REINFORCING STEEL BAR INSTALLATIONS SHALL BE PERFORMED BY PERSONNEL TRAINED TO INSTALL THE SYSTEM PER THE MANUFACTURER'S PRINTED INSTALLATION INSTRUCTIONS (MPII). THE CONTRACTOR SHALL ARRANGE FOR A MANUFACTURER'S REPRESENTATIVE TO PROVIDE ONSITE INSTALLATION TRAINING FOR ALL OF THEIR ANCHORING PRODUCTS THAT ARE TO BE USED AS PART OF THIS PROJECT. THE STRUCTURAL ENGINEER OF RECORD MUST RECEIVE DOCUMENTED CONFIRMATION PRIOR TO THE COMMENCEMENT OF INSTALLING THE POST–INSTALLED PRODUCTS THAT ALL OF THE CONTRACTOR'S PERSONNEL WHO WILL INSTALL POST–INSTALLED ANCHORS AND REINFORCING STEEL BARS HAVE BEEN TRAINED TO INSTALL THE SYSTEM PER THE MANUFACTURER'S PRINTED INSTALLATION INSTRUCTIONS (MPII).
I. POST–INSTALLED ANCHOR AND REINFORCING STEEL CAPACITY IS DEPENDENT UPON SPACING BETWEEN ADJACENT ANCHORS/REINFORCING STEEL AND PROXIMITY OF ANCHORS/REINFORCING STEEL TO EDGE OF CONCRETE. INSTALL ANCHORS/REINFORCING STEEL IN ACCORDANCE WITH SPACING AND EDGE CLEARANCES INDICATED ON THE DRAWINGS.

ALL DIMENSIONS AND EXISTING CONDITIONS
SHALL BE CHECKED AND VERIFIED BY THE CONTRACTOR AT THE SITE.

RKK21\SYS – \\ad.rkk.com\fs\Cloud\Projects\2019\19082_CreameryPS\Cadd\Plans\Struct\19082CR-031-SP-S1.dwg Jan 27, 2023 – 8:27am Plot Scale 1:1

STATE OF MARYLAND BRENT S. TRIMBLE NO. 29928 PROFESSIONAL ENGINEER
01/25/2023

PROFESSIONAL CERTIFICATION
I HEREBY CERTIFY THAT THESE DOCUMENTS WERE PREPARED OR APPROVED BY ME, AND THAT I AM A DULY LICENSED PROFESSIONAL ENGINEER UNDER THE LAWS OF THE STATE OF MARYLAND.
LICENSE NO. 29928 EXPIRATION DATE 01/11/2024

RK&K
700 EAST PRATT STREET, SUITE 500
BALTIMORE, MARYLAND 21202
800.787.3755

NO.	DESCRIPTION	BY	DATE

REVISIONS

TOWN OF EMMITSBURG, MARYLAND
NEW CREAMERY ROAD SEWAGE PUMP STATION
EMMITSBURG, MARYLAND

STRUCTURAL NOTES

ENGINEER	CHECKED BY
KMD	BST
DRAWN BY	DATE
JAB	1/2023

RK&K PROJECT NUMBER 19082

DRAWING NUMBER
S1
SHEET NO. 31 OF 60

STRUCTURAL GENERAL NOTES (CONT.):

J. EXISTING REINFORCING STEEL IN THE CONCRETE STRUCTURE MAY CONFLICT WITH SPECIFIED POST–INSTALLED ANCHOR/REINFORCING STEEL LOCATIONS. UNLESS NOTED ON THE CONTRACT DRAWINGS THAT THE EXISTING REINFORCING STEEL BARS CAN BE CUT, THE CONTRACTOR SHALL PREVIEW THE EXISTING STRUCTURAL DRAWINGS AND SHALL LOCATE THE POSITION OF THE EXISTING REINFORCING STEEL BARS AT THE LOCATIONS OF THE PROPOSED CONCRETE ANCHORS/REINFORCING STEEL, BY HILTI FERROSCAN, GPR, X–RAY, OR OTHER MEANS.

K. ADHESIVE ANCHORS SHALL CONFORM TO THE REQUIREMENTS OF ASTM E 1512 "STANDARD TEST METHODS FOR TESTING BOND PERFORMANCE OF ADHESIVE–BONDED ANCHORS" AND ICBO EX AC–58, "ACCEPTANCE CRITERIA FOR ADHESIVE ANCHORS IN CONCRETE AND MASONRY ELEMENTS."

L. ANCHORS SHALL HAVE STANDARD UNC THREADS, UNLESS OTHERWISE NOTED.

M. ANCHOR INSTALLATION SHALL CONFORM TO THE MANUFACTURER'S CURRENT PRINTED INSTRUCTIONS.

N. REMOVE DUST AND DEBRIS FROM DRILLED HOLES USING COMPRESSED AIR, BRUSH, OR VACUUM AT BOTTOM OF HOLE. IMMEDIATELY REMOVE STANDING WATER AND THOROUGHLY DRY HOLES TO RECEIVE ANCHORS.

O. DO NOT HAMMER IN ANCHORS. INSTALL ANCHORS USING ROTARY HAMMER DRILL OR AS RECOMMENDED BY ANCHOR MANUFACTURER. HAMMERING IN ADHESIVE CAPSULES IS PROHIBITED.

P. PROVIDE ADHESIVE TYPE ANCHORS CONSISTING OF INJECTABLE ADHESIVE CARTRIDGES AND THREADED ANCHOR BOLTS SUPPLIED AS A SYSTEM BY ONE MANUFACTURER. PROVIDE EACH ANCHOR WITH A NUT AND WASHER. AFTER INSTALLATION, DO NOT DISTURB OR LOAD ANCHORS BEFORE THE SPECIFIED CURING TIME ELAPSES (MAY VARY WITH TEMPERATURE).

Q. ALL ANCHORS SHALL BE AS SPECIFIED, OR AN APPROVED EQUAL.

GENERAL INFORMATION

A. FOR STAKE OUT DATA SEE CIVIL DRAWINGS.

GENERAL REQUIREMENTS

A. ELEVATIONS ARE TO BE ACTUAL FINISH ELEVATION. SEE CIVIL DRAWINGS FOR GRADE ELEVATIONS.

B. SHORING REQUIRED FOR THE STABILITY OF THE UNCOMPLETED STRUCTURE OR FOR INSTALLATION OR MODIFICATION OF STRUCTURAL MEMBERS, SHALL BE THE CONTRACTOR'S RESPONSIBILITY.

C. CONTRACTOR SHALL VERIFY ALL EXISTING CONDITIONS, DIMENSIONS AND ELEVATIONS PRIOR TO THE START OF CONSTRUCTION. THE CONTRACTOR SHALL NOTIFY THE ENGINEER OF ANY DISCREPANCIES OR CONFLICTS FOUND IN CONTRACT DOCUMENTS AND/OR FIELD CONDITIONS.

D. CONTRACTOR SHALL COORDINATE ALL REQUIRED OPENINGS WITH CIVIL, MECHANICAL, AND ELECTRICAL DRAWINGS. CONTRACTOR SHALL COORDINATE FINAL SIZE AND LOCATION OF ALL OPENINGS WITH THE ACTUAL EQUIPMENT SUPPLIED, PROJECT REQUIREMENTS, AND WITH FIELD CONDITIONS.

E. THE ENGINEER PERMITS NO OPENINGS OR ALTERATIONS THROUGH BEAMS OR COLUMNS, UNLESS DETAILED ON STRUCTURAL DRAWINGS.

F. THE SIZES AND LOCATIONS OF EQUIPMENT PADS AND PEDESTALS, AS WELL AS EQUIPMENT RELATED FLOORS AND SLAB OPENINGS ARE DEPENDENT ON THE ACTUAL EQUIPMENT FURNISHED. IT SHALL BE THE CONTRACTOR'S RESPONSIBILITY TO COORDINATE AND VERIFY ALL SUCH ITEMS. NO DIMENSIONS INDICATED ON THESE DRAWINGS SHALL BE ALTERED WITHOUT THE ENGINEER'S APPROVAL.

G. FOR MECHANICAL OR ELECTRICAL WORK TO BE INCORPORATED IN FOUNDATION WORK, SEE MECHANICAL OR ELECTRICAL DRAWINGS.

H. BAND ALL EDGES AND OPENINGS IN GRATINGS.

I. BACKFILL MATERIAL MAY NOT BE PLACED AGAINST FOUNDATION WALLS UNTIL THE UPPER BRACING FLOORS ARE IN PLACE FOR AT LEAST 7 DAYS, AND THE WALLS AND BRACING FLOORS HAVE REACHED THE MINIMUM 28–DAY COMPRESSIVE STRENGTH. WHERE BACKFILL IS REQUIRED ON BOTH SIDES OF WALL, BACKFILL BOTH SIDES SIMULTANEOUSLY.

J. ALL HANDRAIL AND RAILING SHALL BE ALUMINUM WITH SIZES AS SHOWN AND DETAILED IN THE PLANS AND SPECIFICATIONS.

K. CONTRACTOR SHALL DESIGN ALL PIPE SADDLES AND CONNECTIONS TO SUPPORTING MEMBERS AS SHOWN IN THE PLANS AND IN ACCORDANCE WITH THE SPECIFICATIONS. THE CONTRACTOR SHALL COORDINATE ALL DIMENSIONS AND ELEVATIONS WITH SADDLE DESIGNS.

L. ANY ADDITIONAL PIPE SUPPORTS THAT ARE REQUIRED AND NOT SHOWN OR DETAILED SHALL BE DESIGNED BY THE CONTRACTOR. CALCULATIONS AND DETAILS SHALL BE SUBMITTED TO THE ENGINEER FOR REVIEW. ALL CALCULATIONS SHALL BE SIGNED AND SEALED BY A PROFESSIONAL ENGINEER REGISTERED IN THE STATE OF MARYLAND.

M. PROVIDE A ROUGHENED CONSTRUCTION JOINT WHERE INDICATED IN THESE DRAWINGS AND FOR SURFACES WHERE NEW CONCRETE WILL BE PLACED AGAINST EXISTING CONCRETE. CONCRETE SURFACES SHALL BE ROUGHENED TO A FULL 1/4" AMPLITUDE AND AN EPOXY BONDING COMPOUND APPLIED IN ACCORDANCE WITH THE MANUFACTURER'S WRITTEN INSTRUCTIONS. ALL PVC AND HYDROPHILIC WATERSTOPS SHOWN SHALL BE INSTALLED IN ACCORDANCE WITH THE MANUFACTURER'S WRITTEN INSTRUCTIONS.

N. IN ADDITION TO SUBMISSIONS AS REQUIRED BY THE SPECIFICATIONS, CONTRACTOR SHALL SUBMIT PLANS, DETAILS AND CALCULATIONS, SIGNED AND SEALED BY AN ENGINEER REGISTERED IN THE STATE OF MARYLAND FOR THE FOLLOWING: RAILING, GRATING, METAL STAIRS, PRE–ENGINEERED BUILDINGS, PRE–FABRICATED BUILDINGS, PRECAST BUILDINGS, AND PRECAST CONCRETE STRUCTURES.

O. INTENTIONALLY ROUGHEN SURFACE OF HORIZONTAL CONSTRUCTION JOINTS IN WALLS AND AT BASE OF WALL TO 1/4" AMPLITUDE.

P. FLOAT TROWEL FINISH THE TOP OF ALL TANK WALLS, FLOORS, ROOFS, CONCRETE FILL AND TOPPING SLABS UNLESS OTHERWISE INDICATED OR SPECIFIED.

Q. REINFORCING STEEL SHALL NOT PASS THROUGH WATERSTOPS.

R. PROJECT DOCUMENTS ARE INTENDED TO BE COMPLEMENTARY. ITEMS INDICATED IN ONE PLACE OR ANOTHER AMONG THE DOCUMENTS SHALL BE INTENDED AS THOUGH SHOWN IN ALL PLACES.

EXCAVATION AND EARTHWORK

A. FOR SITE, EXCAVATION, FILL AND BACKFILL REQUIREMENTS, SEE PROJECT SPECIFICATIONS AND CONTRACT DRAWINGS.

B. REFER TO SPECIFICATIONS FOR ADDITIONAL SITE PREPARATION AND FOUNDATION SUPPORT REQUIREMENTS.

C. LOCATE ANY EXISTING UTILITY LINES OR APPURTENANCES AND ADVISE ENGINEER OF ANY CONFLICTS WITH NEW STRUCTURES PRIOR TO THEIR CONSTRUCTION. DO NOT DEMOLISH ANY EXISTING STRUCTURE WITHOUT WRITTEN AUTHORIZATION.

D. ALL EXCAVATIONS SHALL BE KEPT DRY. STANDING WATER SHALL NOT BE ALLOWED IN EXCAVATIONS.

E. CONTRACTOR SHALL DESIGN AND PROVIDE SUPPORT OF EXCAVATION SYSTEM AS REQUIRED TO SUPPORT SOIL AND CONSTRUCTION LOADS. IF INTERLOCKING STEEL SHEETING IS USED ON THIS PROJECT, IT MAY REMAIN IN PLACE BUT BE CUT OFF TWO FEET BELOW THE TOP OF ALL ADJACENT STRUCTURES, UTILITIES, ROADWAYS, ITEMS OF WORK, OR BELOW FINISHED GRADE.

F. CONTRACTOR SHALL DESIGN AND PROVIDE UNDERPINNING SYSTEM TO SUPPORT EXISTING ADJACENT STRUCTURES AS REQUIRED TO COMPLETE THE WORK.

FORMWORK, SHORING AND BRACING

A. STRUCTURES SHOWN ON THE DRAWINGS HAVE BEEN DESIGNED FOR STABILITY UNDER FINAL CONDITIONS ONLY, EXCEPT AS NOTED. DESIGN SHOWN DOES NOT INCLUDE NECESSARY COMPONENTS OR EQUIPMENT FOR STABILITY OF THE STRUCTURES DURING CONSTRUCTION. CONTRACTOR IS RESPONSIBLE FOR ALL WORK RELATING TO CONSTRUCTION ERECTION METHODS, BRACING, SHORING, RIGGING, GUYS, SCAFFOLDING, FORMWORK, AND OTHER WORK AIDS REQUIRED TO SAFELY PERFORM THE WORK SHOWN.

FOUNDATIONS

A. MAXIMUM ALLOWABLE SOIL PRESSURE: VARIES

B. SOIL PARAMETERS

– DENSITY:	VARIES
– ANGLE OF INTERNAL FRICTION:	VARIES
– FRICTION FACTOR AGAINST SLIDING:	VARIES

C. FOUNDATION PREPARATION

1) BUILDING AREAS SHALL BE COMPLETELY STRIPPED OF VEGETATION, PAVEMENTS, WALLS AND SOFT OR MUDDY AREAS.

2) EXPOSED SUBGRADE SHALL BE COMPACTED TO A MINIMUM OF 92% OF MODIFIED PROCTOR DENSITY IN AREAS TO SUPPORT FLOOR SLABS AND PAVEMENTS. THE UPPERMOST ONE–FOOT (AFTER COMPACTTION) SHOULD BE COMPACTED TO 100–PERCENT OF THE MAXIMUM DRY DENSITY.

D. BEFORE PLACING ANY CRUSHED STONE OR CONCRETE ON SUBGRADE, THE CONTRACTOR SHALL NOTIFY THE ENGINEER.

E. ALL FOUNDATIONS SHALL BEAR ON A MINIMUM OF 12" OF NO. 57 STONE WITH AN ALLOWABLE BEARING CAPACITY AS NOTED ON THE CONTRACT DRAWINGS.

F. CONCRETE SHALL NOT BE POURED ON FROZEN GROUND.

G. FILL ALL VOIDS AND REPLACE DISTURBED SOIL WITH LEAN CONCRETE.

H. REFER TO STRUCTURAL DRAWINGS FOR SPECIFIC FOUNDATION REQUIREMENTS.

I. PROPOSED STRUCTURE FOUNDATIONS SHALL BE UNDERCUT AS SHOWN IN CONTRACT DRAWINGS TO REMOVE EXISTING FILL. UNDERCUT AREA SHALL EXTEND A MINIMUM OF 1 FOOT HORIZONTAL FOR EVERY 1 FOOT OF EXCAVATED DEPTH.

J. STRUCTURAL FILL SHALL BE PLACED IN HORIZONTAL LIFTS WITH A MAXIMUM HEIGHT OF 8 INCHES LOOSE MEASURE. NEW FILL SHALL BE ADEQUATELY KEYED INTO STRIPPED AND SCARIFIED SUBGRADE SOILS AND, WHERE APPLICABLE, BE BENCHED INTO THE EXISTING SLOPE. STRUCTURAL FILL SHALL BE COMPACTED TO A MINIMUM OF 95% OF THE MODIFIED PROCTOR DENSITY.

K. IN CONFINED AREAS, PORTABLE COMPACTION EQUIPMENT AND THIN LIFTS OF 3 TO 4 INCHES MAY BE REQUIRED TO ACHIEVE COMPACTION REQUIRED. EACH LIFT OF FILL SHALL BE TESTED TO CONFIRM THE REQUIRED COMPACTION IS ATTAINED.

L. MOISTURE CONTENT OF STRUCTURAL FILL SHALL BE MAINTAINED WITHIN THREE PERCENTAGE POINTS OF THE OPTIMUM MOISTURE CONTENT AS DETERMINED FROM THE STANDARD PROCTOR DENSITY TEST. CONTRACTOR SHALL HAVE EQUIPMENT ON SITE DURING EARTHWORK FOR BOTH DRYING AND WETTING OF SOILS.

M. WHERE CONSTRUCTION OR WEATHER HAS DISTURBED SUBGRADE, THE UPPER 8 INCHES OF SOILS (OR MORE IF WARRANTED) INTENDED FOR STRUCTURAL SUPPORT SHALL BE SCARIFIED AND COMPACTED. EACH LIFT OF FILL SHALL BE TESTED TO CONFIRM THE REQUIRED COMPACTION IS ATTAINED.

N. REFER TO GEOTECHNICAL REPORT DATED JULY 17, 2019 BY RK&K.

STATEMENT OF SPECIAL INSPECTIONS

A. SPECIAL INSPECTIONS AND STRUCTURAL TESTING CONFORMING TO CHAPTER 17 OF THE IBC, AND ANY LOCAL AMENDMENTS WILL BE PROVIDED BY AN INDEPENDENT AGENCY EMPLOYED BY THE OWNER FOR THE ITEMS IDENTIFIED IN THE "STATEMENT OF SPECIAL INSPECTIONS" (SSI), UNLESS WAIVED BY THE BUILDING OFFICIAL.

B. SPECIAL INSPECTIONS WILL BE PROVIDED BY A CERTIFIED OR QUALIFIED INSPECTOR AND ASSOCIATED TESTING WILL BE PERFORMED BY AN APPROVED ACCREDITED INDEPENDENT AGENCY. THE OWNER WILL SECURE AND PAY FOR THE SERVICE OF THE AGENCY TO PERFORM ALL SPECIAL INSPECTION AND ASSOCIATED TESTS. INSPECTORS FOR EACH SYSTEM AND MATERIAL WILL BE INTERNATIONAL CODE COUNCIL (ICC) CERTIFIED OR OTHERWISE APPROVED BY THE BUILDING OFFICIAL.

C. DUTIES OF THE SPECIAL INSPECTOR (SI):

1) OBSERVE ALL WORK LISTED IN THE SSI FOR COMPLIANCE WITH THE APPROVED CONTRACT DOCUMENTS.

2) FURNISH SPECIAL INSPECTION REPORTS TO THE STRUCTURAL ENGINEER OF RECORD (SER), GENERAL CONTRACTOR (GC), OWNER, AND BUILDING OFFICIAL WITHIN ONE WEEK OF INSPECTION OR TEST COMPLETION. ALL ITEMS NOT IN COMPLIANCE WILL BE BROUGHT TO THE IMMEDIATE ATTENTION OF THE CONTRACTOR FOR CORRECTION AND, IF UNCORRECTED, TO THE SER AND BUILDING OFFICIAL.

3) SUBMIT A FINAL REPORT OF SPECIAL INSPECTIONS AND CERTIFICATE OF COMPLETION AFTER THE SPECIAL INSPECTIONS SPECIFIED FOR THE PROJECT HAVE BEEN COMPLETED.

D. DUTIES OF THE GENERAL CONTRACTOR (GC):

1) REVIEW, ACKNOWLEDGE, AND ACCEPT THE SPECIAL REQUIREMENTS CONTAINED IN THE SSI IN ACCORDANCE WITH SECTION 1704.4 OF THE IBC, PRIOR TO COMMENCEMENT OF THE WORK.

2) SCHEDULE AND COORDINATE THE WORK SUCH THAT THE REQUIRED INSPECTIONS ARE CONDUCTED AND APPROVED PRIOR TO PROCEEDING WITH THE WORK.

3) ALL WORK REQUIRING SPECIAL INSPECTION SHALL REMAIN ACCESSIBLE AND EXPOSED UNTIL IT HAS BEEN OBSERVED BY THE SPECIAL INSPECTOR.

4) UPON COMPLETION OF THE WORK, PROVIDE A CERTIFICATE OF COMPLETION INDICATING THAT TO THE BEST OF HIS/HER KNOWLEDGE, INFORMATION, AND BELIEF THE WORK HAS BEEN CONSTRUCTED IN ACCORDANCE WITH APPROVED PLANS, SPECIFICATIONS, AND THE SSI.

E. SEE THE "SCHEDULE OF SPECIAL INSPECTION SERVICES" WITHIN THE SSI FOR THE TYPES, EXTENTS, AND FREQUENCY OF SPECIFIC ITEMS REQUIRING SPECIAL INSPECTIONS AND/OR STRUCTURAL TESTS AS PART OF THIS PROJECT.

F. STRUCTURAL OBSERVATION IN ACCORDANCE WITH IBC SECTION 1704.6 IS NOT APPLICABLE TO THE PROJECT.

G. SPECIAL INSPECTION REQUIREMENTS FOR WIND RESISTANCE IN ACCORDANCE WITH IBC SECTION 1705.11 ARE NOT APPLICABLE TO THIS PROJECT.

H. SPECIAL INSPECTION REQUIREMENTS FOR SEISMIC RESISTANCE IN ACCORDANCE WITH IBC SECTION 1705.12 ARE NOT APPLICABLE TO THIS PROJECT.

ALL DIMENSIONS AND EXISTING CONDITIONS
SHALL BE CHECKED AND VERIFIED BY THE CONTRACTOR AT THE SITE.

RKK21\SYS – \\ad.rkk.com\fs\Cloud\Projects\2019\19082_CreameryPS\Cadd\Plans\Struct\19082CR–032–SP–S2.dwg Jan 27, 2023 – 8:27am Plot Scale 1:1

STATE OF MARYLAND PROFESSIONAL ENGINEER – BRENT S. TRIMBLE – No. 29928
01/25/2023

PROFESSIONAL CERTIFICATION
I HEREBY CERTIFY THAT THESE DOCUMENTS WERE PREPARED OR APPROVED BY ME, AND THAT I AM A DULY LICENSED PROFESSIONAL ENGINEER UNDER THE LAWS OF THE STATE OF MARYLAND.
LICENSE NO. 29928 EXPIRATION DATE 01/11/2024

RK&K
700 EAST PRATT STREET, SUITE 500
BALTIMORE, MARYLAND 21202
800.787.3755

NO.	DESCRIPTION	BY	DATE

REVISIONS

TOWN OF EMMITSBURG, MARYLAND
NEW CREAMERY ROAD SEWAGE PUMP STATION
EMMITSBURG, MARYLAND

STRUCTURAL NOTES

ENGINEER	CHECKED BY
KMD	BST
DRAWN BY	DATE
JAB	1/2023

RK&K PROJECT NUMBER
19082

DRAWING NUMBER
S2

NOTE:

1. ALL CONNECTIONS ARE CONCEPTUAL AND ARE TO BE DESIGNED BY CONTRACTOR IN ACCORDANCE WITH SPECIFICATION SECTION 13120.

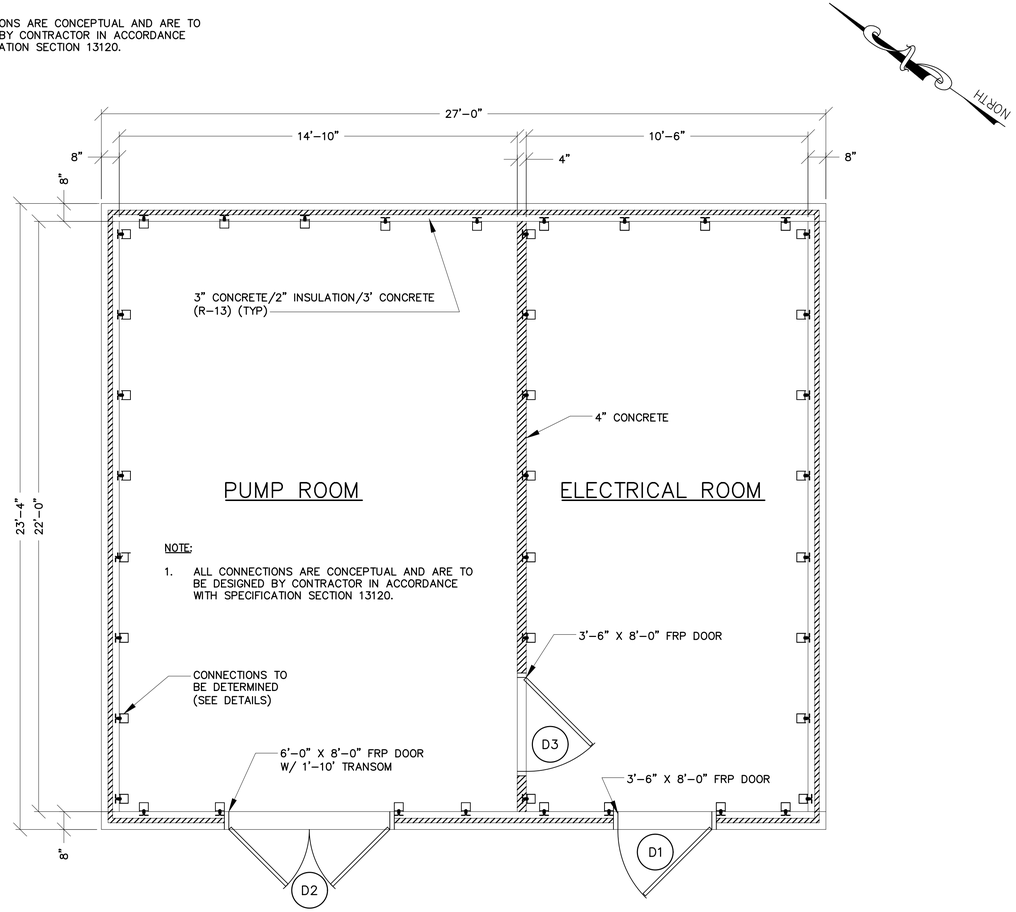

PRECAST CONCRETE BUILDING PLAN – GRADE LEVEL
SCALE: ⅜"=1'-0"

LOUVER SCHEDULE

ID.	TOP ELEVATION	APPROXIMATE SIZE (W X H)	PRESSURE DROP (INCHES OF WATER)	DEPTH (INCHES)	MATERIAL	NOTES	TYPE	REMARKS
L1	397.00	20" X 20"	0.10	6	ALUMINUM	1,6,11	6" STATIONARY LOUVER	SEE DAMPER D1, DAMPER SCHEDULE
L2	397.00	18" X 18"	0.20	6	ALUMINUM	1,6,11	6" STATIONARY LOUVER	SEE DAMPER D2, DAMPER SCHEDULE

NOTES:
1. EXTENDED SILL
2. HINGED FRAME
3. FRONT SECURITY BARS
4. REAR SECURITY BARS
5. FILTER RACKS
6. BIRD SCREEN
7. INSECT SCREEN
8. PRIME COAT FINISH
9. BAKED ENAMEL FINISH
10. EPOXY FINISH
11. KYNAR FINISH
12. CLEAR ANODIZED
13. COLOR ANODIZED
14. OPPOSED BLADE DAMPER

DOOR SCHEDULE

ID.	DOOR SIZES	DOOR MATERIAL	FRAME (TYPE)	HARDWARE	ACCESSORIES	ACTIVE LEAF
D1	3'-6" X 8'-0"	FRP	F-3	1,3,4,6,7,9	5,6,8	RH
D2	6'-0" X 8'-0"/ 6'-0" X 1'-10"	FRP	F-3	1,3,4,5,6,7	3,4,5,6,7,8	RH
D3	3'-6" X 8'-0"	FRP	F-3	3,4,6,7	5,6,8	RH

HARDWARE:
1. LOCKS (ENTRANCE)
2. PRIVACY LOCKS
3. HINGES
4. CLOSER
5. BOLTS
6. KICKPLATE
7. DOOR STOP
8. PUSH/PULL
9. PANIC DEVICE

ACCESSORIES:
1. WINDOW
2. LOUVER
3. TRANSOM
4. CUTOUT
5. THRESHOLD
6. WEATHERSTRIP
7. ASTRAGAL
8. DOOR SWEEP

NOTES:

1. CONTRACTOR SHALL COORDINATE CRANE ELECTRIFICATION SYSTEM WITH CRANE MANUFACTURER, AND SHALL ORDER DOOR WITH ADDITIONAL NOTCHES AS NECESSARY. ALL ADDITIONAL NOTCHES IN DOOR SHALL BE MADE BY THE DOOR MANUFACTURER AT THE FACTORY AND INCLUDED ON THE DOOR SHOP DRAWINGS FOR REVIEW. ALL NOTCHES SHALL BE SECURE AND WEATHER TIGHT.
2. COORDINATE REMOVABLE MULLION AND NEOPRENE SEAL WITH MONORAIL BEAM TO ENSURE TIGHT FIT OF NEOPRENE SEAL.

NEW DOOR DETAIL
NTS

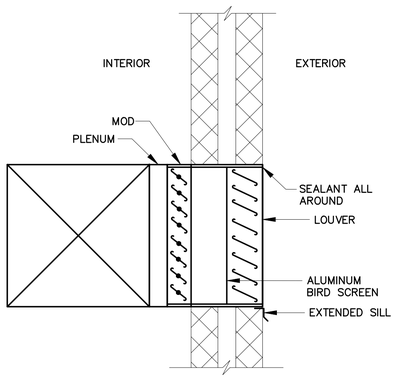

TYPICAL LOUVER INSTALLATION DETAIL
NTS

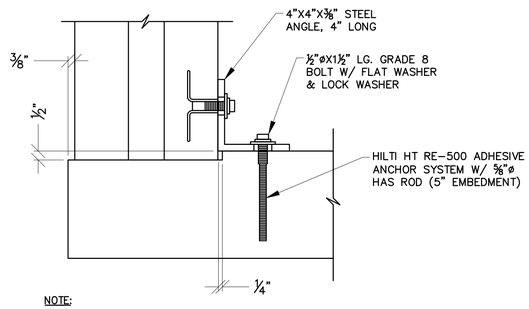

NOTE:

1. ALL CONNECTIONS ARE CONCEPTUAL AND ARE TO BE DESIGNED BY CONTRACTOR IN ACCORDANCE WITH SPECIFICATION SECTION 13120.

MID PANEL TO CIP FLOOR CONNECTION
SCALE: 3" = 1'-0"

ALL DIMENSIONS AND EXISTING CONDITIONS SHALL BE CHECKED AND VERIFIED BY THE CONTRACTOR AT THE SITE.

⅜"=1'-0" 24" 12" 0 2' 4' 6'

PROFESSIONAL CERTIFICATION
I HEREBY CERTIFY THAT THESE DOCUMENTS WERE PREPARED OR APPROVED BY ME, AND THAT I AM A DULY LICENSED PROFESSIONAL ENGINEER UNDER THE LAWS OF THE STATE OF MARYLAND.
LICENSE NO. 29929
EXPIRATION DATE 01/11/2024
01/25/2023
RK&K
700 EAST PRATT STREET, SUITE 500
BALTIMORE, MARYLAND 21202
800.787.3755

NO.	DESCRIPTION	BY	DATE
	REVISIONS		

TOWN OF EMMITSBURG, MARYLAND
NEW CREAMERY ROAD SEWAGE PUMP STATION
EMMITSBURG, MARYLAND

PRECAST CONCRETE BUILDING PLAN AND LOUVER AND DOOR SCHEDULE AND DETAILS

ENGINEER	CHECKED BY
KDM	BST
DRAWN BY	DATE
JAB	1/2023
RK&K PROJECT NUMBER	
19082	

DRAWING NUMBER
S3
SHEET NO. 33 OF 60

RK&K 21 SYS – \\rkk.com\VA\Cloud\Projects\2019\19082_Creamery\PS\Cadd\Plans\Struct\19082CR-033-SP-S3.dwg Jan 27, 2023 - 8:28am Plot Scale 1:1

NOTE:

1. ALL CONNECTIONS ARE CONCEPTUAL AND ARE TO BE DESIGNED BY CONTRACTOR IN ACCORDANCE WITH SPECIFICATION SECTION 13120.

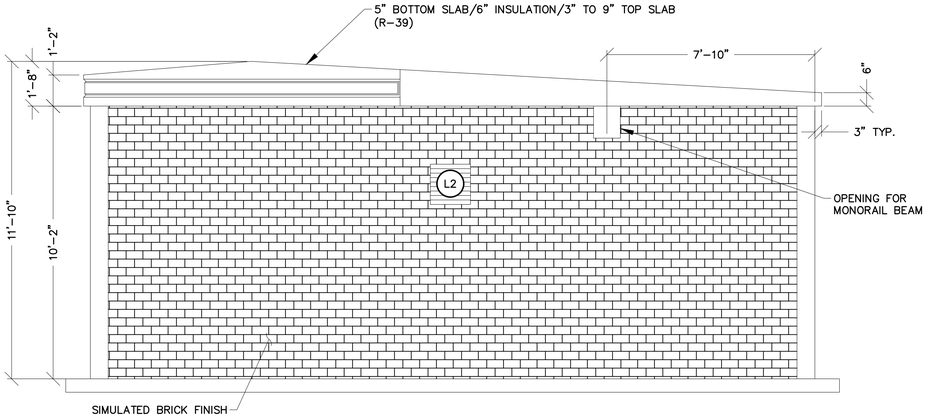

NORTH

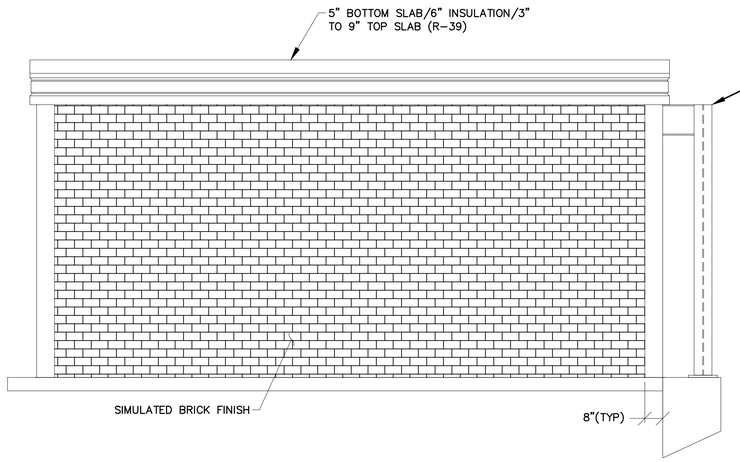

EAST

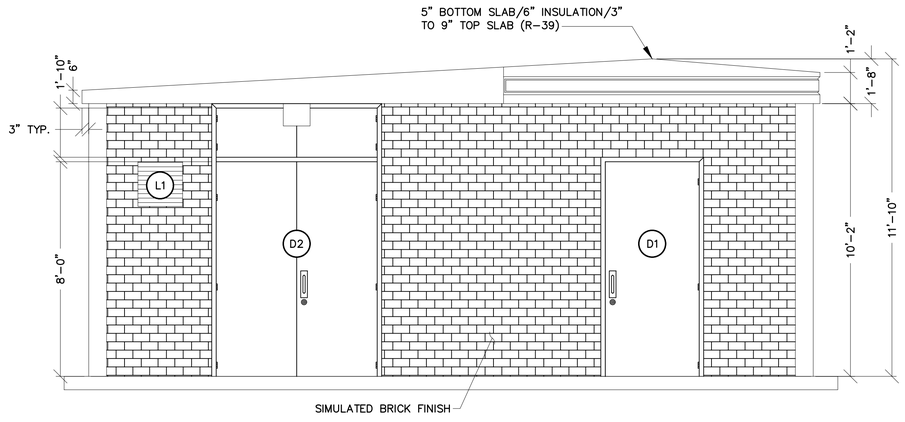

SOUTH

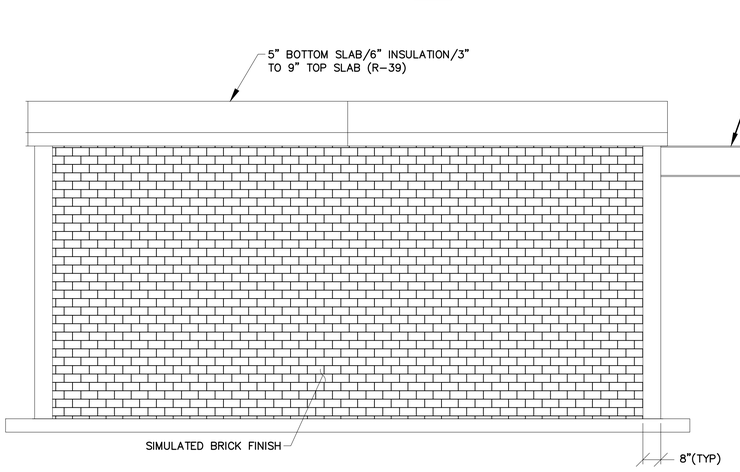

WEST

ELEVATIONS
SCALE: ⅜"=1'-0"

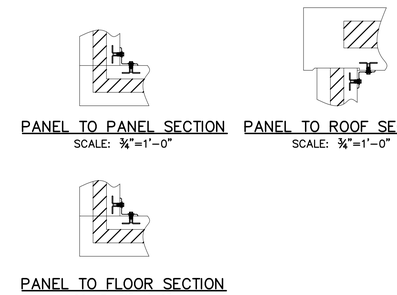

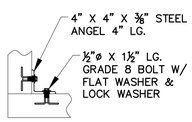

PANEL TO PANEL CONNECTION
SCALE: 1"=1'-0"

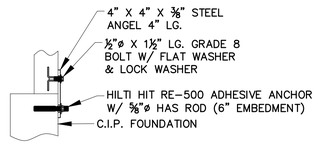

PANEL TO FOUNDATION CONNECTION
SCALE: 1"=1'-0"

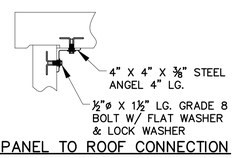

MID PANEL TO ROOF CONNECTION
SCALE: 1"=1'-0"

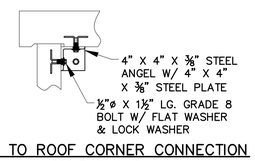

PANEL TO ROOF CORNER CONNECTION
SCALE: 1"=1'-0"

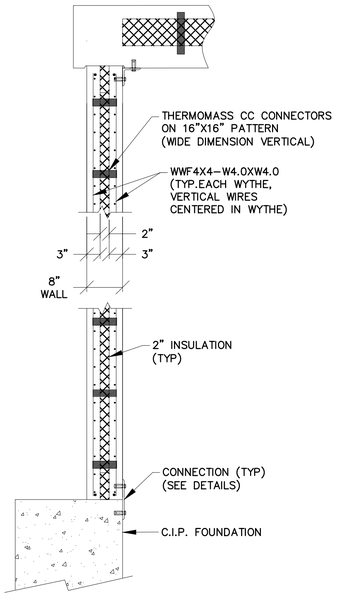

TYPICAL SECTION (INSULATED)
SCALE: ¾"=1'-0"

1"=1'-0" 12" 6" 0 1' 2'
¾"=1'-0" 12" 6" 0 1' 2' 3'
⅜"=1'-0" 24" 12" 0 2' 4' 6'

ALL DIMENSIONS AND EXISTING CONDITIONS SHALL BE CHECKED AND VERIFIED BY THE CONTRACTOR AT THE SITE.

RK&K
700 EAST PRATT STREET, SUITE 500
BALTIMORE, MARYLAND 21202
800.787.3755

PROFESSIONAL CERTIFICATION

I HEREBY CERTIFY THAT THESE DOCUMENTS WERE PREPARED OR APPROVED BY ME, AND THAT I AM A DULY LICENSED PROFESSIONAL ENGINEER UNDER THE LAWS OF THE STATE OF MARYLAND. LICENSE NO. 29929 EXPIRATION DATE 01/11/2024

STATE OF MARYLAND KEVIN M. DEMPSEY PROFESSIONAL ENGINEER 01/25/2023

NO.	DESCRIPTION	BY	DATE
	REVISIONS		

TOWN OF EMMITSBURG, MARYLAND
NEW CREAMERY ROAD SEWAGE PUMP STATION
EMMITSBURG, MARYLAND

PRECAST CONCRETE BUILDING ELEVATIONS AND DETAILS

ENGINEER	CHECKED BY
KMD	BST
DRAWN BY	DATE
JAB	1/2023
RK&K PROJECT NUMBER	
19082	

DRAWING NUMBER
S4
SHEET NO. 34 OF 60

RK&K\SYS = \\pd.rkk.com\16\Docs\Projects\2019\19082_Creamery\PS\Civil\Plans\Struct\19082CR-034-SP-S4.dwg Jan 27, 2023 - 8:28am Plot Scale 1:1

NOTES:

1. SEE CIVIL DRAWINGS FOR PROPOSED BUILDING LOCATION.
2. FOR ADDITIONAL DETAILS ON PRECAST BUILDING, SEE MECHANICAL DRAWINGS AND DRAWING S3 AND S4.
3. FOR ADDITIONAL DETAILS ON ACCESS HATCHES, EQUIPMENT LAYOUT, AND PIPE OPENINGS, SEE MECHANICAL DRAWINGS.

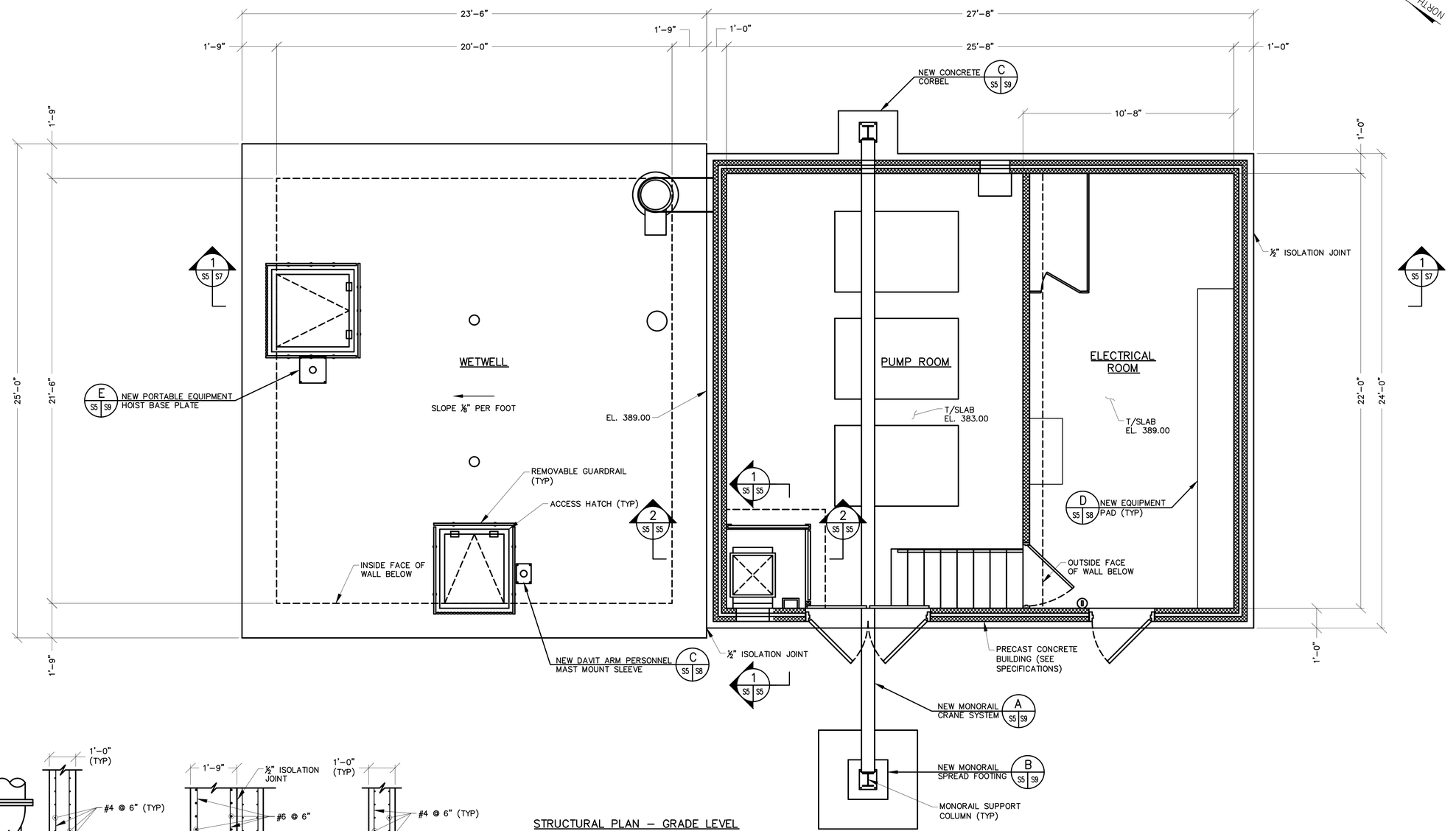

STRUCTURAL PLAN – GRADE LEVEL
SCALE: ⅜"=1'-0"

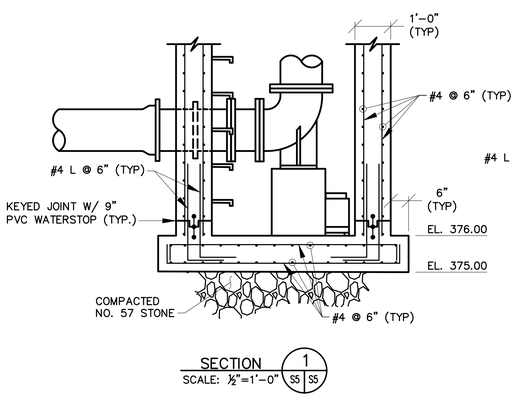

SECTION 1
SCALE: ½"=1'-0" S5 S5

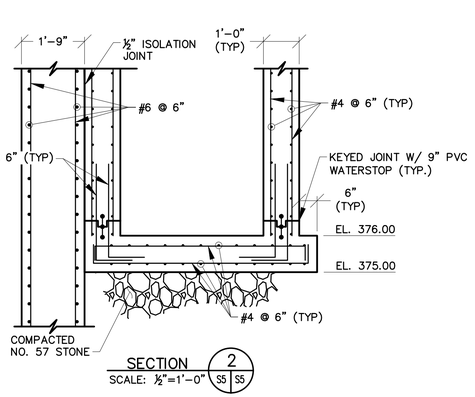

SECTION 2
SCALE: ½"=1'-0" S5 S5

ALL DIMENSIONS AND EXISTING CONDITIONS SHALL BE CHECKED AND VERIFIED BY THE CONTRACTOR AT THE SITE.

½"=1'-0" 12" 0 1' 2' 3' 4' 5'

⅜"=1'-0" 24" 12" 0 2' 4' 6'

MARYLAND REGISTERED PROFESSIONAL ENGINEER KEVIN M. DUNCAN STATE OF MARYLAND 01/25/2023

PROFESSIONAL CERTIFICATION

I HEREBY CERTIFY THAT THESE DOCUMENTS WERE PREPARED OR APPROVED BY ME, AND THAT I AM A DULY LICENSED PROFESSIONAL ENGINEER UNDER THE LAWS OF THE STATE OF MARYLAND. LICENSE NO. 29929 EXPIRATION DATE 01/11/2024

RK&K
700 EAST PRATT STREET, SUITE 500
BALTIMORE, MARYLAND 21202
800.787.3755

NO.	DESCRIPTION	BY	DATE
	REVISIONS		

TOWN OF EMMITSBURG, MARYLAND
NEW CREAMERY ROAD SEWAGE PUMP STATION
EMMITSBURG, MARYLAND

STRUCTURAL PLAN – GRADE LEVEL

ENGINEER	CHECKED BY
KMD	BST
DRAWN BY	DATE
JAB	1/2023
RK&K PROJECT NUMBER	
19082	

DRAWING NUMBER
S5
SHEET NO. 35 OF 60

RK&K\21\S\S5 – \\ctdata.com\Us\Cloud\Projects\2019\19082_Creamery\PS\Civil\Plans\Struct\19082R-S35-SP-S5.dwg Jan 27, 2023 – 8:29pm Plot Scale 1:1

NOTES:

1. SEE CIVIL DRAWINGS FOR PROPOSED BUILDING LOCATION.
2. FOR ADDITIONAL DETAILS ON ACCESS, EQUIPMENT LAYOUT, AND PIPE OPENINGS, SEE MECHANICAL DRAWINGS.

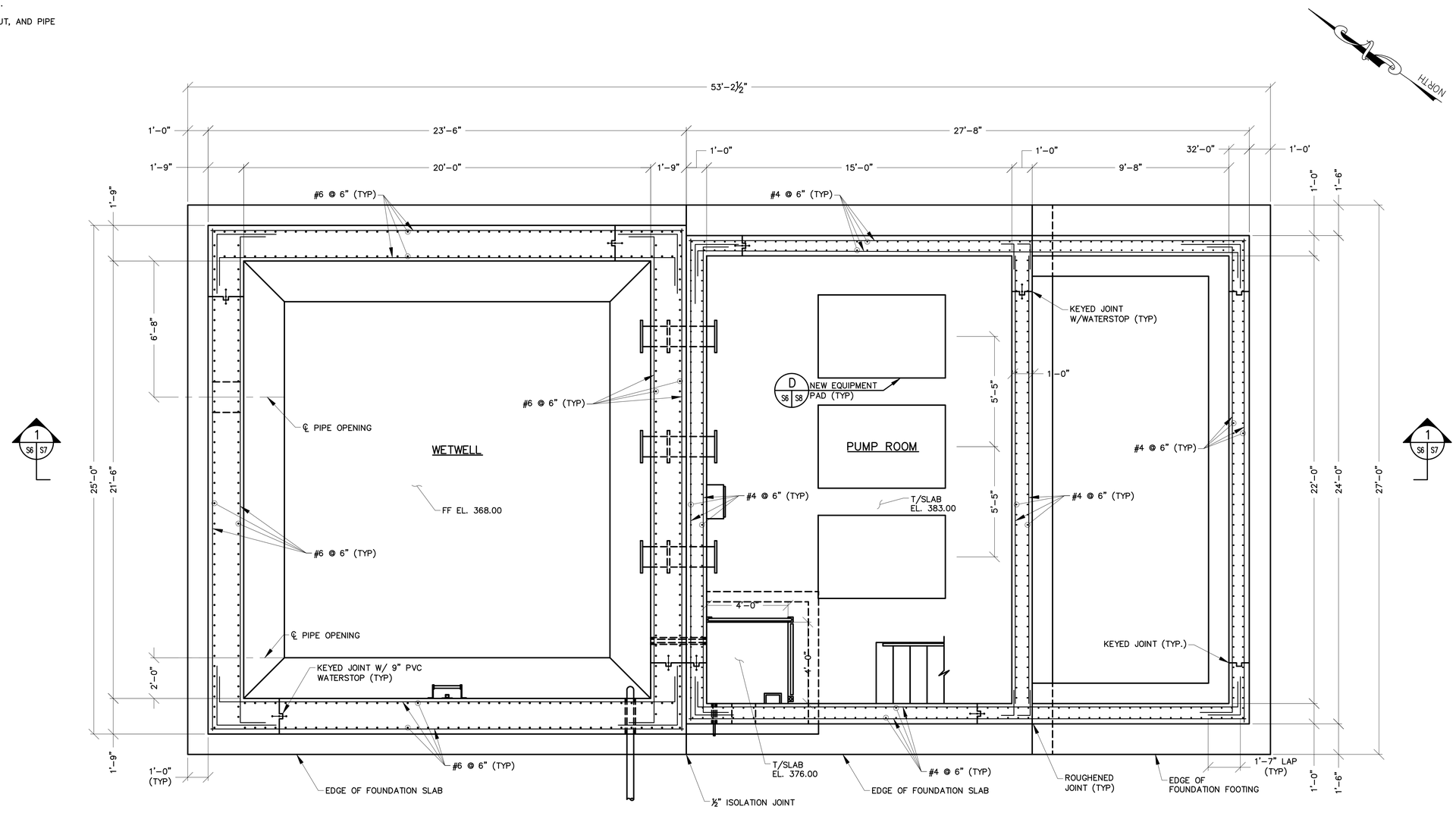

STRUCTURAL IMPROVEMENT PLAN – INTERMEDIATE LEVEL

SCALE: ⅜"=1'-0"

ALL DIMENSIONS AND EXISTING CONDITIONS SHALL BE CHECKED AND VERIFIED BY THE CONTRACTOR AT THE SITE.

⅜"=1'-0" 24" 12" 0 2' 4' 6'

PROFESSIONAL CERTIFICATION

I HEREBY CERTIFY THAT THESE DOCUMENTS WERE PREPARED OR APPROVED BY ME, AND THAT I AM A DULY LICENSED PROFESSIONAL ENGINEER UNDER THE LAWS OF THE STATE OF MARYLAND.

LICENSE NO. 29928 EXPIRATION DATE 01/11/2024

RK&K 700 EAST PRATT STREET, SUITE 500 BALTIMORE, MARYLAND 21202 800.787.3755

STATE OF MARYLAND BRIAN S. TRIMBLE LICENSED PROFESSIONAL ENGINEER 01/25/2023

NO.	DESCRIPTION	BY	DATE
	REVISIONS		

TOWN OF EMMITSBURG, MARYLAND
NEW CREAMERY ROAD SEWAGE PUMP STATION
EMMITSBURG, MARYLAND

STRUCTURAL PLAN – INTERMEDIATE LEVEL

ENGINEER	CHECKED BY
KMD	BST
DRAWN BY	DATE
JAB	1/2023
RK&K PROJECT NUMBER	
19082	

DRAWING NUMBER

S6

SHEET NO. 36 OF 60

RKK21\SYS – \\ad.rkk.com\fs\Cloud\Projects\2019\19082_Creamery\PS\Cadd\Plans\Struct\19082CR-036-SP-S6.dwg Jan 27, 2023 – 8:29am Plot Scale 1:1

NOTES:

1. SEE CIVIL DRAWINGS FOR PROPOSED BUILDING LOCATION.
2. FOR ADDITIONAL DETAILS ON PRECAST BUILDING, SEE MECHANICAL DRAWINGS AND DRAWINGS S3 AND S4.
3. FOR ADDITIONAL DETAILS ON ACCESS HATCHES, EQUIPMENT LAYOUT, AND PIPE OPENINGS, SEE MECHANICAL DRAWINGS.
4. PROVIDE NOTCH IN PRECAST BUILDING WALL FOR MONORAIL BEAM TO PASS THROUGH TO OUTSIDE COLUMN. CONTRACTOR SHALL COORDINATE CRANE ELECTRIFICATION SYSTEM WITH CRANE MANUFACTURER AND SHALL PROVIDE WALL WITH ADDITIONAL NOTCHES AS NECESSARY. ALL NOTCHES SHALL BE MADE BY THE PRECAST BUILDING MANUFACTURER AT THE FACTORY AND BE INCLUDED ON THE PRECAST BUILDING SHOP DRAWINGS FOR REVIEW. ALL NOTCHES SHALL BE SECURE AND WEATHER TIGHT.
5. DETERMINE ELEVATION/LOCATION BASED UPON PUMPS/EQUIPMENT PROVIDED.
6. APPROXIMATE WEATHERED ROCK LINE SHOWN FOR INFORMATION ONLY AND TO AID IN ILLUSTRATION OF APPROXIMATE EXCAVATION LIMITS. ACTUAL ELEVATION WILL VARY AND SHALL BE VERIFIED IN THE FIELD. REFER TO GEOTECHNICAL REPORT FOR MORE INFORMATION.

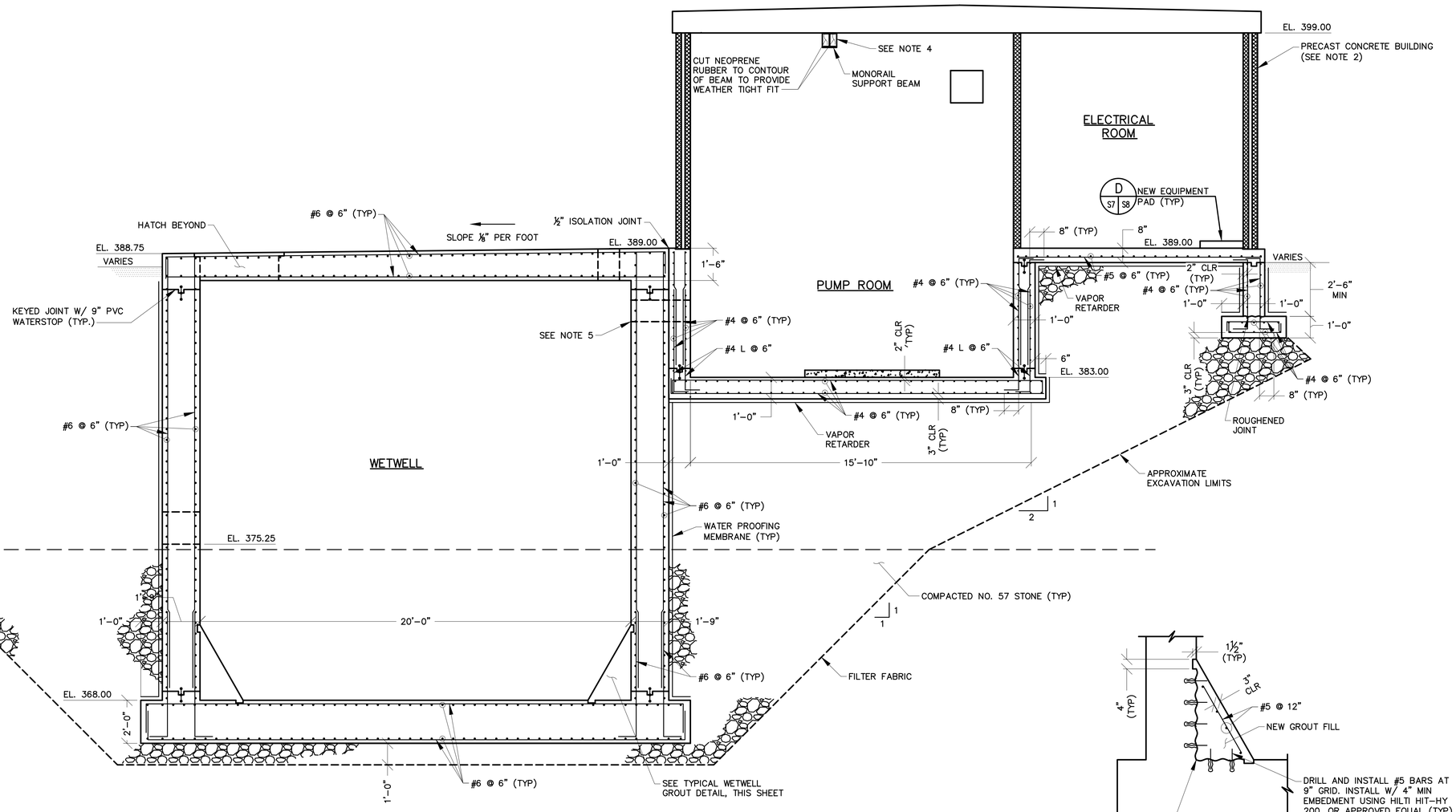

STRUCTURAL SECTION 1
SCALE: ⅜"=1'–0"

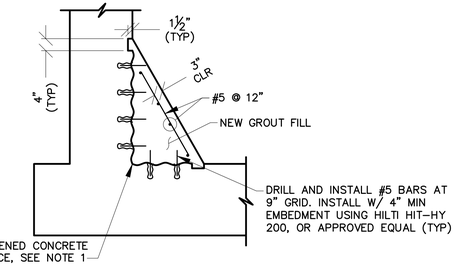

NOTES:

1. SURFACE OF CONCRETE SHALL BE ROUGHENED TO A FULL AMPLITUDE OF ¼" AND SCRUBBED WITH A COARSE WIRE BRUSH TO REMOVE ALL LAITANCE AND TO PROVIDE A ROUGHENED SURFACE FOR BONDING GROUT TO CONCRETE. APPLY BONDING ADHESIVE IN ACCORDANCE WITH MANUFACTURER'S RECOMMENDATIONS. EPOXY BONDING ADHESIVE SHALL BE "SIKADUR 32, HI–MOD", OR EQUAL.

TYPICAL WETWELL GROUT DETAIL
NTS

ALL DIMENSIONS AND EXISTING CONDITIONS SHALL BE CHECKED AND VERIFIED BY THE CONTRACTOR AT THE SITE.

⅜"=1'–0" 24" 12" 0 2' 4' 6'

PROFESSIONAL CERTIFICATION
I HEREBY CERTIFY THAT THESE DOCUMENTS WERE PREPARED OR APPROVED BY ME, AND THAT I AM A DULY LICENSED PROFESSIONAL ENGINEER UNDER THE LAWS OF THE STATE OF MARYLAND.
LICENSE NO. 29929
EXPIRATION DATE 01/11/2024
01/25/2023
RK&K
700 EAST PRATT STREET, SUITE 500
BALTIMORE, MARYLAND 21202
800.787.3755

NO.	DESCRIPTION	BY	DATE
	REVISIONS		

TOWN OF EMMITSBURG, MARYLAND
NEW CREAMERY ROAD SEWAGE PUMP STATION
EMMITSBURG, MARYLAND

STRUCTURAL SECTION 1

ENGINEER	CHECKED BY
KMD	BST
DRAWN BY	DATE
JAB	1/2023
RK&K PROJECT NUMBER	
19082	

DRAWING NUMBER
S7
SHEET NO. 37 OF 60

RK\2211\SYS – \\pd.rkk.com\fs\Cloud\Projects\2019\19082_Creamery\PS\Civil\Plans\Struct\19082P2b–037–SP–S7.dwg Jan 27, 2023 – 8:30am Plot Scale 1:1

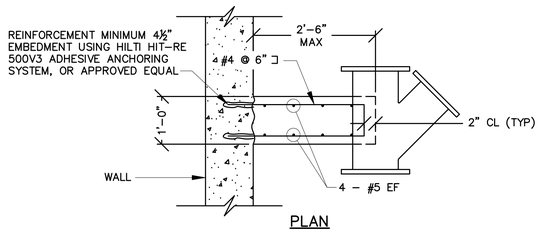

PLAN

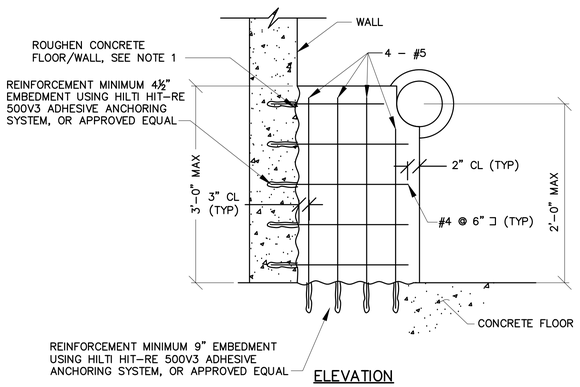

ELEVATION

NOTES:

1. SURFACE OF CONCRETE SHALL BE ROUGHENED TO A FULL AMPLITUDE OF ¼" AND SCRUBBED WITH A COARSE WIRE BRUSH TO REMOVE ALL LAITANCE AND TO PROVIDE A ROUGHENED SURFACE FOR BONDING NEW CONCRETE TO EXISTING CONCRETE. APPLY BONDING ADHESIVE IN ACCORDANCE WITH MANUFACTURER'S RECOMMENDATIONS. EPOXY BONDING ADHESIVE SHALL BE "SIKADUR 32, HI–MOD", OR APPROVED EQUAL.
2. THE 28–DAY MINIMUM CONCRETE COMPRESSIVE STRENGTH SHALL BE F'c = 4,500 PSI FOR CONCRETE PIPE SUPPORTS.

CONCRETE PIPE SUPPORT DETAIL A (C5 | S8)
NTS

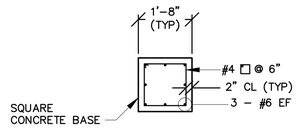

PLAN

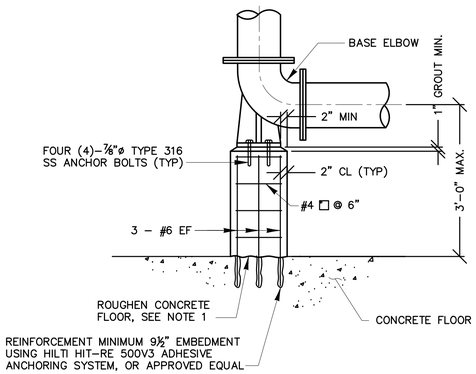

ELEVATION

NOTES:

1. SURFACE OF CONCRETE SHALL BE ROUGHENED TO A FULL AMPLITUDE OF ¼" AND SCRUBBED WITH A COARSE WIRE BRUSH TO REMOVE ALL LAITANCE AND TO PROVIDE A ROUGHENED SURFACE FOR BONDING NEW CONCRETE TO EXISTING CONCRETE. APPLY BONDING ADHESIVE IN ACCORDANCE WITH MANUFACTURER'S RECOMMENDATIONS. EPOXY BONDING ADHESIVE SHALL BE "SIKADUR 32, HI–MOD", OR APPROVED EQUAL.
2. THE 28–DAY MINIMUM CONCRETE COMPRESSIVE STRENGTH SHALL BE F'c = 4,500 PSI FOR BASE ELBOW SUPPORT.

BASE ELBOW SUPPORT DETAIL B (M8 | S8)
NTS

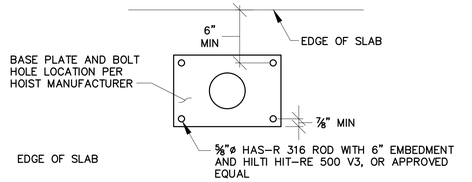

NOTES:

1. THE CONNECTION DESIGN FOR THE FLUSH MOUNTED SOCKET BASE IS BASED ON THE LOADS PROVIDED BY THE MANUFACTURER FOR THE SPECIFIED DAVIT CRANE. THE CONTRACTOR SHALL DESIGN THE ANCHORS FOR ANY OTHER HOIST. THE CONTRACTOR SHALL SUBMIT THE ALTERNATIVE HOIST DETAILS, DESIGN LOADS AND THE ANCHOR DESIGN CALCULATIONS FOR APPROVAL. THE ANCHOR DESIGN SHALL BE SIGNED AND SEALED BY A PROFESSIONAL ENGINEER REGISTERED IN THE STATE OF MARYLAND.
2. MOUNT SLEEVE SHALL BE PROVIDED WITH A SLEEVE CAP.

DAVIT ARM PERSONNEL MAST MOUNT SLEEVE DETAIL C (C5 | S8 | M5 | S5)
NTS

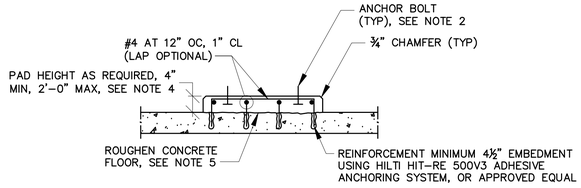

NOTES:

1. THE MINIMUM PAD SIZE SHALL BE AS INDICATED OR AS DETERMINED BY THE EQUIPMENT MANUFACTURER.
2. WHEN ANCHOR BOLTS ARE REQUIRED, THE SIZE, NUMBER, TYPE, LOCATION AND THE THREAD PROJECTION OF THE ANCHOR BOLTS SHALL BE DETERMINED BY THE EQUIPMENT MANUFACTURER. HOLD CONCRETE ANCHOR BOLTS IN POSITION WITH A TEMPLATE WHILE PAD IS BEING PLACED.
3. EQUIPMENT BASES SHALL BE INSTALLED LEVEL UNLESS NOTED OTHERWISE ON THE PLANS.
4. FOR EQUIPMENT PADS WITH HEIGHT GREATER THAN 2'–0", THE CONTRACTOR SHALL DESIGN AND SUBMIT A DETAIL TO THE ENGINEER FOR APPROVAL.
5. SURFACE OF CONCRETE SHALL BE ROUGHENED TO A FULL AMPLITUDE OF ¼" AND SCRUBBED WITH A COARSE WIRE BRUSH TO REMOVE ALL LAITANCE AND TO PROVIDE A ROUGHENED SURFACE FOR BONDING NEW CONCRETE TO EXISTING CONCRETE. APPLY BONDING ADHESIVE IN ACCORDANCE WITH MANUFACTURER'S RECOMMENDATIONS. EPOXY BONDING ADHESIVE SHALL BE "SIKADUR 32, HI–MOD", OR APPROVED EQUAL.

EQUIPMENT PAD DETAIL D (M5 | S8 | M6 | M7 | S5 | S6 | S7)
NTS

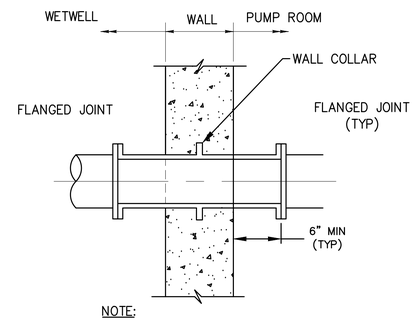

NOTE:

TYPICAL AT ALL DUCTILE IRON PIPE NON–BURIED WALL PENETRATIONS.

PIPE WALL PENETRATION DETAIL E (M6 | S8 | M7)
NTS

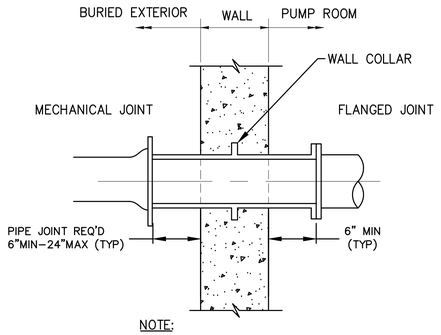

NOTE:

ALL BURIED JOINTS SHALL BE RESTRAINED.

FORCE MAIN WALL PENETRATION DETAIL F (M6 | S8 | M8)
NTS

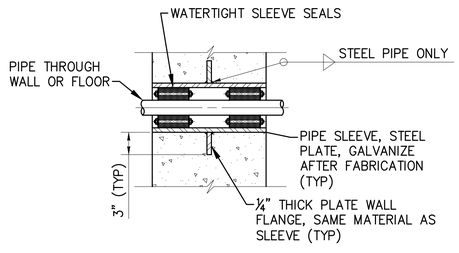

WALL SLEEVED PIPE OPENING DETAIL G (M6 | S8 | M10)
NTS

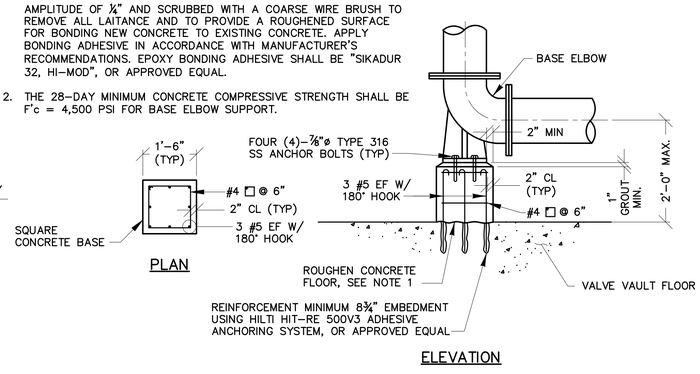

PLAN

ELEVATION

NOTES:

1. SURFACE OF CONCRETE SHALL BE ROUGHENED TO A FULL AMPLITUDE OF ¼" AND SCRUBBED WITH A COARSE WIRE BRUSH TO REMOVE ALL LAITANCE AND TO PROVIDE A ROUGHENED SURFACE FOR BONDING NEW CONCRETE TO EXISTING CONCRETE. APPLY BONDING ADHESIVE IN ACCORDANCE WITH MANUFACTURER'S RECOMMENDATIONS. EPOXY BONDING ADHESIVE SHALL BE "SIKADUR 32, HI–MOD", OR APPROVED EQUAL.
2. THE 28–DAY MINIMUM CONCRETE COMPRESSIVE STRENGTH SHALL BE F'c = 4,500 PSI FOR BASE ELBOW SUPPORT.

VALVE VAULT BASE ELBOW SUPPORT DETAIL H (C5 | S8)
NTS

ALL DIMENSIONS AND EXISTING CONDITIONS SHALL BE CHECKED AND VERIFIED BY THE CONTRACTOR AT THE SITE.

PROFESSIONAL CERTIFICATION
I HEREBY CERTIFY THAT THESE DOCUMENTS WERE PREPARED OR APPROVED BY ME, AND THAT I AM A DULY LICENSED PROFESSIONAL ENGINEER UNDER THE LAWS OF THE STATE OF MARYLAND. LICENSE NO. 29929 EXPIRATION DATE 01/11/2024
01/25/2023
RK&K
700 EAST PRATT STREET, SUITE 500
BALTIMORE, MARYLAND 21202
800.787.3755

NO.	DESCRIPTION	BY	DATE
	REVISIONS		

TOWN OF EMMITSBURG, MARYLAND
NEW CREAMERY ROAD SEWAGE PUMP STATION
EMMITSBURG, MARYLAND

STRUCTURAL SCHEDULES AND DETAILS

ENGINEER	CHECKED BY
KMD	BST
DRAWN BY	DATE
JAB	1/2023
RK&K PROJECT NUMBER	
19082	

DRAWING NUMBER
S8
SHEET NO. 38 OF 60

RK&K31.SYS = \\rkkva.com\to\Cloud\Projects\2019\19082_Creamery@FS\Civil\Plans\Struct\19082S8–038–SP–S8.dwg Jan 27, 2023 – 8:30am Plot Scale 1:1

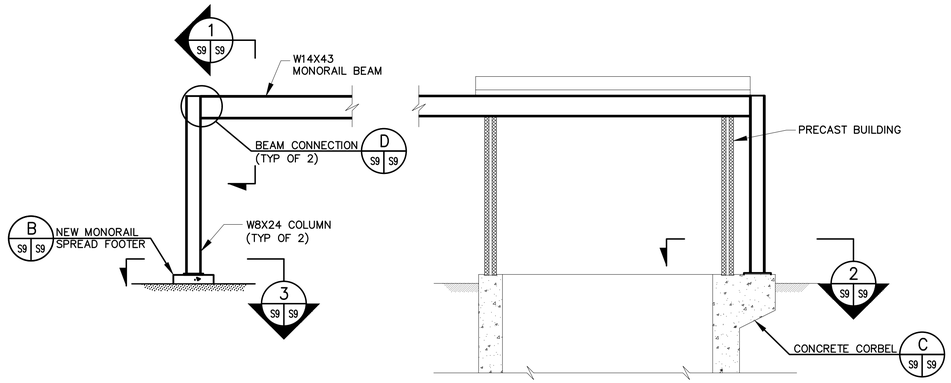

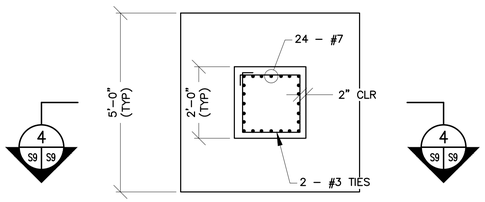

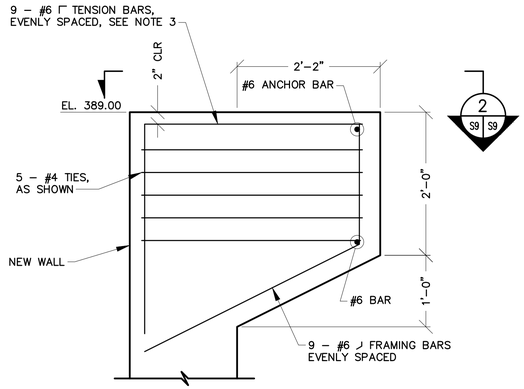

NOTES:

1. CONTRACTOR SHALL COORDINATE WITH MANUFACTURER OF CRANE AND HOISTS FURNISHED, TAKE ACCURATE FIELD MEASUREMENTS, AND PREPARE AND SUBMIT LAYOUT DRAWINGS FOR APPROVAL PRIOR TO PURCHASING ANY EQUIPMENT.

MONORAIL CRANE SYSTEM DETAIL A
SCALE: ¼"=1'–0"
M5 S9
M7
S4
S5

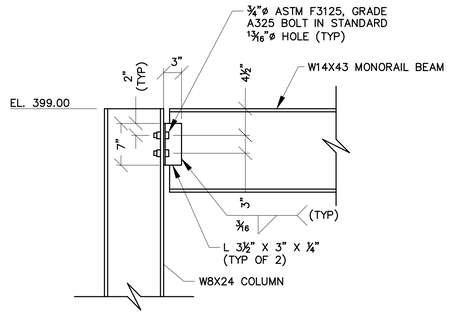

BEAM CONNECTION DETAIL D
SCALE: 1"=1'–0"
S9 S9

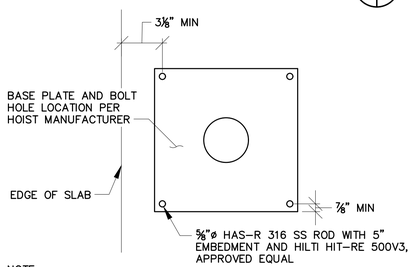

NOTE:

1. THE CONNECTION DESIGN FOR THE MOUNTED SOCKET PEDESTAL BASE IS BASED ON THE LOADS PROVIDED BY THE MANUFACTURER FOR THE SPECIFIED DAVIT CRANE. THE CONTRACTOR SHALL DESIGN THE ANCHORS FOR ANY OTHER HOIST. THE CONTRACTOR SHALL SUBMIT THE ALTERNATIVE HOIST DETAILS, DESIGN LOADS AND THE ANCHOR DESIGN CALCULATIONS FOR APPROVAL. THE ANCHOR DESIGN SHALL BE SIGNED AND SEALED BY A PROFESSIONAL ENGINEER REGISTERED IN THE STATE OF MARYLAND.

PORTABLE EQUIPMENT HOIST PEDESTAL BASE PLATE DETAIL E
NTS
M5 S9
M7
S5

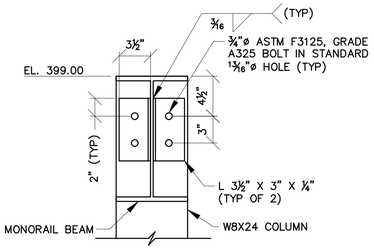

SECTION 1
SCALE: 1½"=1'–0"
S9 S9

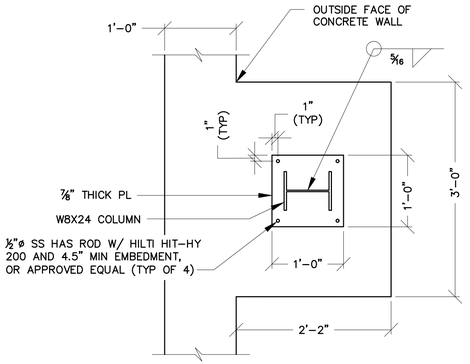

SECTION 2
SCALE: 1"=1'–0"
S9 S9

MONORAIL SPREAD FOOTING DETAIL B
SCALE: ¾"=1'–0"
C3 S9
M5
S5
S9

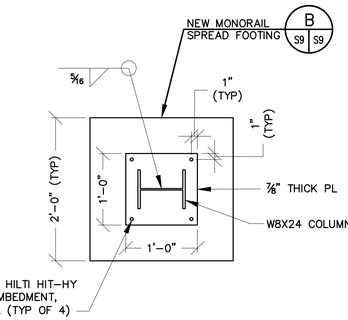

SECTION 3
SCALE: 1"=1'–0"
S9 S9

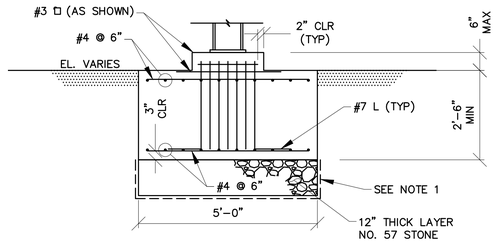

NOTE:

1. EDGE OF EXCAVATION AND PLACEMENT OF FILTER FABRIC SHALL BE AS CLOSE TO VERTICAL AS POSSIBLE. ALL STONE FILL SHALL BE WRAPPED WITH FILTER FABRIC.

SECTION 4
SCALE: ½"=1'–0"
S9 S9

NOTES

1. WALL REINFORCING STEEL NOT SHOWN FOR CLARITY.
2. TENSION BARS SHALL BE WELDED TO ANCHOR BAR, SEE TYPICAL TENSION BAR WELD DETAIL, THIS SHEET
3. TENSION BARS SHALL BE EVENLY SPACED, EXCEPT ADJUSTMENT IS PERMITTED AS REQUIRED TO AVOID CONFLICT WITH MONORAIL SUPPORT COLUMN BASE PLATE ANCHORAGE.

CONCRETE CORBEL DETAIL C
SCALE: 1"=1'–0"
C3 S9
M5
S5
S9

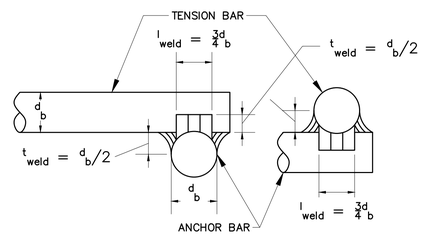

TYPICAL TENSION BAR WELD DETAIL
NTS

¼"=1'–0" 4' 2' 0 4' 8'

½"=1'–0" 12" 0 1' 2' 3' 4' 5'
¾"=1'–0" 12" 6" 0 1' 2' 3'
1"=1'–0" 12" 6" 0 1' 2'
1½"=1'–0" 0 4" 8" 12" 16" 20" 24"

ALL DIMENSIONS AND EXISTING CONDITIONS
SHALL BE CHECKED AND VERIFIED BY THE CONTRACTOR AT THE SITE.

RK621\SYS – \\rkd.ek.com\VA\Cloud\Projects\2019\19082_Creamery\PS\Cadd\Plans\Struct\19082CR–039–SP–S9.dwg Jan 27, 2023 – 8:30am Plot Scale 1:1

PROFESSIONAL CERTIFICATION
I HEREBY CERTIFY THAT THESE DOCUMENTS WERE PREPARED OR APPROVED BY ME, AND THAT I AM A DULY LICENSED PROFESSIONAL ENGINEER UNDER THE LAWS OF THE STATE OF MARYLAND.
LICENSE NO. 29929
EXPIRATION DATE 01/11/2024
01/25/2023
RK&K
700 EAST PRATT STREET, SUITE 500
BALTIMORE, MARYLAND 21202
800.787.3755

NO.	DESCRIPTION	REVISIONS	BY	DATE

TOWN OF EMMITSBURG, MARYLAND
NEW CREAMERY ROAD SEWAGE PUMP STATION
EMMITSBURG, MARYLAND

STRUCTURAL DETAILS

ENGINEER	CHECKED BY
KMD	BST
DRAWN BY	DATE
JAB	1/2023
RK&K PROJECT NUMBER	
19082	

DRAWING NUMBER
S9
SHEET NO. 39 OF 60

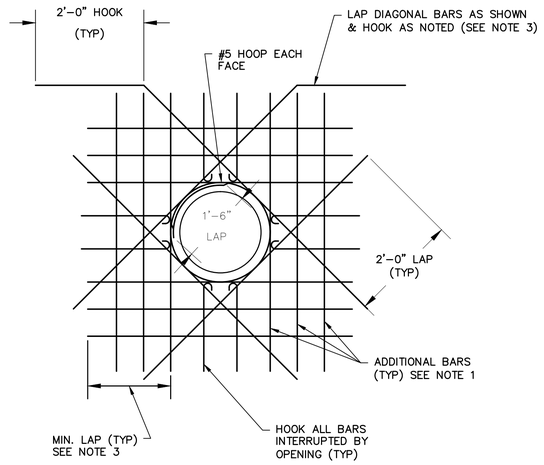

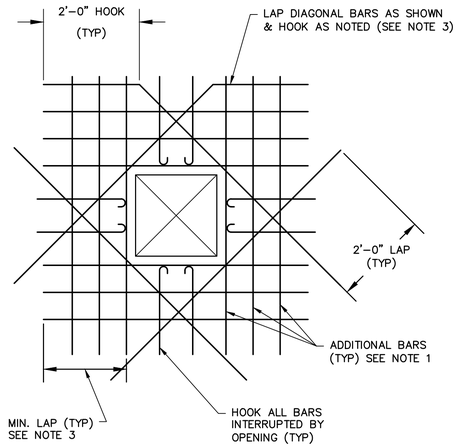

NOTES:

1. NUMBER OF ADDITIONAL REINFORCING BARS AT EACH SIDE OF OPENING SHALL EQUAL HALF THE NUMBER OF INTERRUPTED BARS IN EACH LAYER OF REINFORCING.
2. SIZE OF ADDITIONAL REINFORCING BARS TO EQUAL SIZE OF INTERRUPTED REINFORCING BARS.
3. PROVIDE STANDARD HOOK BARS IF LAP LENGTH EXTENSION CANNOT BE OBTAINED AT JOINTS OR OTHER OBSTRUCTIONS. PLACE ADDITIONAL BARS IN SAME PLANES AS INTERRUPTED REINFORCING.
4. SIZE OF DIAGONAL BARS SHALL BE THE SIZE OF THE LARGEST NORMAL REINFORCING BAR CUT, UNLESS OTHERWISE NOTED. LOCATE DIAGONALS IN EACH LAYER OF REINFORCING.
5. PLACE DIAGONAL BARS INSIDE NORMAL REINFORCING.
6. ALL REINFORCING TO CLEAR OPENING OR FLANGE COLLARS BY 2".
7. ADDITIONAL REINFORCING BARS ARE REQUIRED AT ALL LOCATIONS WHERE THE REINFORCING IS INTERRUPTED BY AN OPENING.
8. IF THE OPENING CAN BE CAST WITHOUT INTERRUPTING ANY REINFORCING STEEL AND PROVIDING REQUIRED CLEAR COVER, THEN ADDITIONAL REINFORCING AROUND THE OPENING IS NOT REQUIRED.
9. FOR ALL OPENINGS, THE MINIMUM REINFORCING STEEL CONCRETE COVER SHALL BE MAINTAINED.

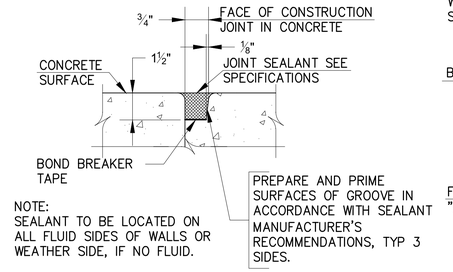

JOINT SEALANT DETAIL

NTS

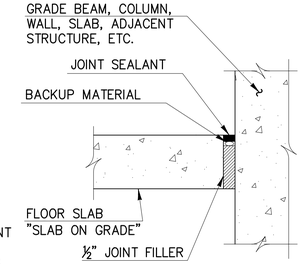

ISOLATION JOINT

NTS

ADDITIONAL REINFORCING BAR DETAILS

NTS

REINFORCING SIZE	DEVELOPMENT LENGTH		LAP SPLICE LENGTH		HOOK DEVELOP.
	TOP BARS	OTHER BARS	TOP BARS	OTHER BARS	LENGTH, IDH
#3	1'-0"	1'-0"	1'-4"	1'-4"	7"
#4	1'-2"	1'-0"	1'-7"	1'-4"	9"
#5	1'-6"	1'-2"	2'-0"	1'-7"	1'-0"
#6	1'-9"	1'-5"	2'-4"	1'-11"	1'-2"
#7	2'-7"	2'-0"	3'-5"	2'-8"	1'-4"
#8	2'-11"	2'-3"	3'-10"	3'-0"	1'-6"
#9	3'-8"	2'-10"	4'-10"	3'-9"	1'-9"
#10	4'-6"	3'-6"	5'-11"	4'-7"	1'-11"
#11	5'-5"	4'-2"	7'-1"	5'-5"	2'-2"

f'c = 4,500 PSI PLAN REINFORCING

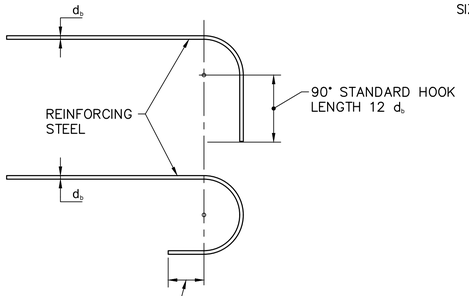

STANDARD REINFORCING BAR HOOK DETAILS

NTS

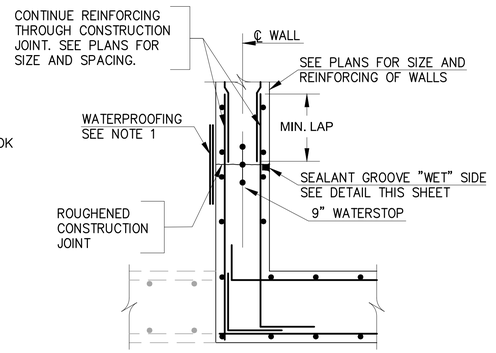

NOTE:
1. PROVIDE MEMBRANE WATERPROOFING IF ADJACENT TO EARTH.

CONSTRUCTION JOINT–WALL TO WALL

NTS

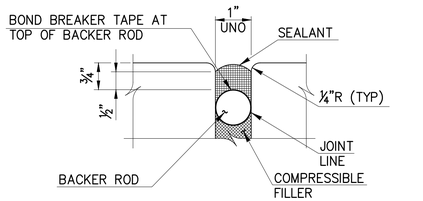

NOTES:
1. EXTEND COMPRESSIBLE JOINT FILLER TO UNDERSIDE OF SLAB FOR SLABS ON GRADE.
2. FOR WALLS, FORM ALL JOINT EDGES WITH ½" CHAMFER.
3. FOR SLABS, EDGE TOP OF EXPOSED SLAB JOINT WITH ¼" RADIUS.
4. FOR UNDERSIDE OF EXPOSED SLABS, FORM JOINT EDGES WITH ½" CHAMFER.
5. SEALANT TO BE LOCATED ON THE TOP OF ALL SLABS AND ALL SUFACES IN CONTACT WITH FLUID AND/OR WEATHER.

EXPANSION AND ISOLATION JOINT SEALANT DETAIL

NTS

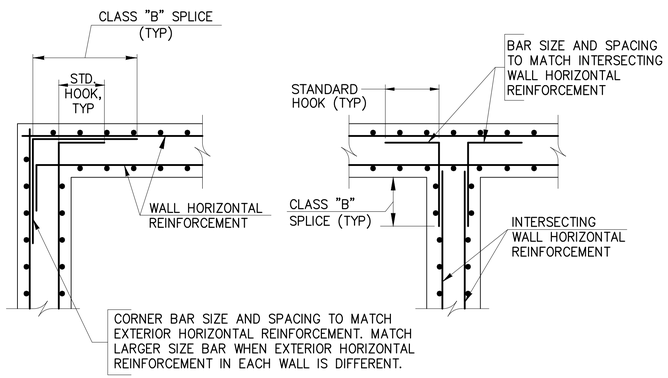

WALL CORNER REINFORCING DETAIL

NTS

WALL INTERSECTION DETAIL

NTS

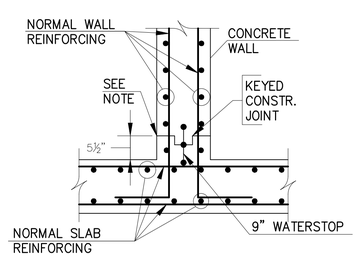

TYPICAL WALL–SLAB CONSTRUCTION JOINT

NTS

NOTE:
PROVIDE MEMBRANE WATERPROOFING IF ADJACENT TO EARTH.

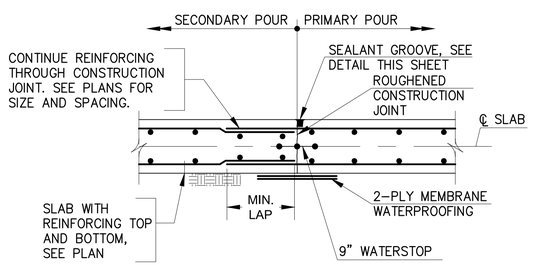

FOUNDATION CONSTRUCTION JOINT

NTS

ALL DIMENSIONS AND EXISTING CONDITIONS
SHALL BE CHECKED AND VERIFIED BY THE CONTRACTOR AT THE SITE.

RK2113\S\S – \\ad.rk4.com\16\Cloud\Projects\2019\19082_Creamery\PS\Civil\Plans\Struct\19082R-A40-SP-S10.dwg Jan 27, 2023 – 8:27pm Plot Scale 1:1

PROFESSIONAL CERTIFICATION
I HEREBY CERTIFY THAT THESE DOCUMENTS WERE PREPARED OR APPROVED BY ME, AND THAT I AM A DULY LICENSED PROFESSIONAL ENGINEER UNDER THE LAWS OF THE STATE OF MARYLAND.
LICENSE NO. 29929
EXPIRATION DATE 01/11/2024
01/25/2023
RK&K
700 EAST PRATT STREET, SUITE 500
BALTIMORE, MARYLAND 21202
800.787.3755

NO.	DESCRIPTION	BY	DATE
	REVISIONS		

TOWN OF EMMITSBURG, MARYLAND
NEW CREAMERY ROAD SEWAGE PUMP STATION
EMMITSBURG, MARYLAND

STRUCTURAL DETAILS

ENGINEER	CHECKED BY
KMD	BST
DRAWN BY	DATE
JAB	1/2023
RK&K PROJECT NUMBER	
19082	

DRAWING NUMBER
S10
SHEET NO. 40 OF 60

ELECTRICAL ABBREVIATIONS

A	–	AMPERES
AC	–	ALTERNATING CURRENT
A.F.F.	–	ABOVE FINISHED FLOOR
A.F.G.	–	ABOVE FINISHED GRADE
ALUM.	–	ALUMINUM
ATS	–	AUTOMATIC TRANSFER SWITCH
C	–	CONDUIT
D	–	DEEP
DC	–	DIRECT CURRENT
DISC.	–	DISCONNECT
DWG.	–	DRAWING
EF	–	EXHAUST FAN
FLA	–	FULL LOAD AMPERES
G.F.I.	–	GROUND FAULT INTERRUPTER
GRD.	–	GROUND
GRS	–	GALVANIZED RIGID STEEL
H	–	HIGH
H/O/A	–	HAND/OFF/AUTO
HP	–	HORSEPOWER
KW	–	KILOWATT
MCC	–	MOTOR CONTROL CENTER
MCP	–	MOTOR CIRCUIT PROTECTOR
M.O.D.	–	MOTOR OPERATED DAMPER
NO.	–	NUMBER
OIT	–	OPERATOR INTERFACE TERMINAL
P	–	POLE
PCS	–	PUMP CONTROL SYSTEM
PLC	–	PROGRAMMABLE LOGIC CONTROLLER
PH	–	PHASE
PR.	–	PAIR
SCH.	–	SCHEDULE
SF	–	SUPPLY FAN
SHLD.	–	SHIELDED
SPD	–	SURGE PROTECTIVE DEVICE
S.S.	–	STAINLESS STEEL
T–M	–	THERMAL MAGNETIC
TYP.	–	TYPICAL
V	–	VOLTS
VFD	–	VARIABLE FREQUENCY DRIVE
W	–	WIRE, WATT, WIDE
WP	–	WEATHERPROOF
XFMR	–	TRANSFORMER

ELECTRICAL SYMBOL SCHEDULE

	–	1'x4' LED LIGHT FIXTURE
	–	EMERGENCY LIGHT FIXTURE
	–	COMBINATION BATTERY EMERGENCY/EXIT LIGHT FIXTURE
	–	20A–120V DUPLEX RECEPTACLE
	–	TELEPHONE OUTLET
(5)	–	MOTOR (NUMBER INDICATES HP)
	–	DISCONNECT SWITCH
E	–	EMERGENCY STOP PUSH BUTTON
J	–	JUNCTION BOX
T	–	THERMOSTAT
F	–	FREEZESTAT
T	–	TRANSFORMER
S	–	SINGLE POLE SWITCH
S_{WP}	–	WEATHERPROOF SWITCH
	–	HOME RUN TO PANEL
	–	TICKS INDICATE NUMBER OF WIRES – NOT INCLUDING GROUND CONDUCTOR
	–	WIRING CONCEALED IN CONDUIT
	–	CONDUIT CONCEALED IN FLOOR OR SLAB
	–	CIRCUIT BREAKER
	–	MOTOR STARTER
	–	THERMAL OVERLOAD
	–	CONCRETE ENCASED ELECTRICAL DUCT BANK
A	–	DUCT BANK CROSS SECTION
G	–	#4/0 GROUND RING
	–	CADWELD GROUND CONNECTION

GENERAL ELECTRICAL NOTES (APPLICABLE TO ALL DRAWINGS)

1. EXISTING EQUIPMENT IS SHOWN IN A LIGHT WEIGHT AND IDENTIFIED WITH SLANTED TEXT. NEW EQUIPMENT AND WIRING IS SHOWN BOLD.
2. ALL FASTENERS AND MOUNTING HARDWARE USED FOR THE INSTALLATION OF ALL ELECTRICAL ITEMS SHALL BE 316 STAINLESS STEEL.
3. ALL ALUMINUM BACKBOARDS SHALL BE 3/16 INCH THICK, AND SIZED AS REQUIRED TO ACCOMMODATE EQUIPMENT. EDGES OF BACKBOARDS SHALL BE BEVELED SO THEY ARE SMOOTH.
4. ALL ALUMINUM IN CONTACT WITH CONCRETE SHALL BE COATED WITH TWO COATS OF ZINC CHROMATE PRIMER OR BITUMINOUS PAINT TO PREVENT A REACTION BETWEEN THE ALUMINUM AND CONCRETE.
5. WHERE ELECTRICAL EQUIPMENT IS SHOWN MOUNTED ON A CONCRETE PAD, THE PAD SHALL BE 3" HIGH WITH CHAMFERED EDGES. THE PAD SHALL EXTEND 2" BEYOND THE EDGES OF THE EQUIPMENT.
6. CONTRACTOR SHALL FURNISH AND INSTALL A SEPARATE INSULATED GROUND CONDUCTOR IN ALL CONDUITS. ALL GROUND CONDUCTORS SHALL BE #12 UNLESS NOTED OTHERWISE ON DRAWINGS.
7. CONTRACTOR SHALL COORDINATE THE EXACT LOCATION OF ALL UNDERGROUND CONDUITS AND DUCT BANKS TO AVOID INTERFERENCES WITH UNDERGROUND PIPING.
8. ALL DUCT BANKS THAT PENETRATE BUILDING WALLS SHALL BE DOWELED INTO THE WALL USING #4 REBAR.
9. ALL DUCT BANKS AND CONDUITS SHALL BE SLOPED AWAY FROM BUILDINGS AND STRUCTURES.
10. WHERE A WIRING LEGEND IS SHOWN ON A DRAWING, IT ONLY PERTAINS TO THAT DRAWING.
11. WIRING SHOWN TO MOTOR DISCONNECT SWITCHES SHALL CONTINUE TO THE MOTOR.
12. ALL CONDUITS SHALL BE LABELED INDICATING THE VOLTAGE OF THE WIRING IN THE CONDUIT.
13. PROVIDE AN ENGRAVED YELLOW NAMEPLATE ON ALL PANELS INDICATING WHERE THE PANEL IS FED FROM.

ALL DIMENSIONS AND EXISTING CONDITIONS SHALL BE CHECKED AND VERIFIED BY THE CONTRACTOR AT THE SITE.

RK&K\SYS – \\pd.rkk.com\fs\Docs\Projects\2019\19082_Creamery\PS\Cadd\Plans\Elec\19082E-041-EP-E01.dwg Jan 27, 2023 - 8:39am Plot Scale: 1:1

STATE OF MARYLAND
SCOTT JOSEPH BOLLINGER
PROFESSIONAL ENGINEER
1/27/23

PROFESSIONAL CERTIFICATION
I HEREBY CERTIFY THAT THESE DOCUMENTS WERE PREPARED OR APPROVED BY ME, AND THAT I AM A DULY LICENSED PROFESSIONAL ENGINEER UNDER THE LAWS OF THE STATE OF MARYLAND.
LICENSE NO. 50811
EXPIRATION DATE 06/14/2023

RK&K
700 EAST PRATT STREET, SUITE 500
BALTIMORE, MARYLAND 21202
800.787.3755

NO.	DESCRIPTION	BY	DATE
	REVISIONS		

TOWN OF EMMITSBURG, MARYLAND
NEW CREAMERY ROAD SEWAGE PUMP STATION
EMMITSBURG, MARYLAND

ELECTRICAL ABBREVIATIONS, SYMBOLS, AND NOTES

ENGINEER	CHECKED BY
SMJ	DTB
DRAWN BY	DATE
SMJ	1/2023
RK&K PROJECT NUMBER	
19082	

DRAWING NUMBER
E1
SHEET NO. 41 OF 60

NOTES

1. COORDINATE REMOVAL OF EXISTING ELECTRIC SERVICE AND INSTALLATION OF NEW ELECTRIC SERVICE WITH POWER COMPANY.
2. PROVIDE A CONCRETE PAD FOR THE TRANSFORMER. COORDINATE PAD WITH THE POWER COMPANY.
3. COORDINATE THE INSTALLATION OF THE TELEPHONE SERVICE WITH THE TELEPHONE COMPANY.

WIRING LEGEND

(1) UNDERGROUND ELECTRIC SERVICE BY POWER COMPANY IN 5"C PLUS 5" SPARE CONDUIT BY CONTRACTOR. SEE ELECTRIC SERVICE DUCT BANK SECTION ON DWG. E3

(2) TELEPHONE SERVICE IN 1"C TO TELEPHONE BOX ON PUMP STATION WALL

(3) 2#10, #10 GRD. TO PANEL "L" IN MCC–C. RUN IN DUCT BANK CONDUIT NO. 7

(4) 2#12 TO PANEL "L" IN MCC–C. RUN IN DUCT BANK CONDUIT NO. 7

(5) 3#600MCM, #3 GRD. TO ATS IN MCC–C. RUN IN DUCT BANK CONDUIT NO. 6

(6) 2#14 FOR GENERATOR START SIGNAL TO ATS IN MCC–C. RUN IN DUCT BANK CONDUIT NO. 4

(7) 6#14 FOR GENERATOR ALARMS TO PUMP STATION CONTROL PANEL. RUN IN DUCT BANK CONDUIT NO. 5

(8) #2/0 GRD.–1¼"C TO GENERATOR GROUND RING

TELEPHONE PEDESTAL

EXISTING TRANSFORMER TO BE REMOVED AFTER NEW PUMP STATION IS ONLINE

UNDERGROUND ELECTRIC SERVICE. TO BE DISCONNECTED AND ABANDONED IN PLACE

5"C DIRECT BURIED FOR TEMPORARY ELECTRIC SERVICE TO EXISTING TRANSFORMER

TEMPORARY SERVICE POLE INSTALLED BY POWER COMPANY

PRIMARY OVERHEAD ELECTRIC SERVICE

WET WELL

PUMP STATION

#4/0 GRD. RING (TYP.) SEE SPECS FOR GROUNDING REQUIREMENTS

GROUND TEST POINT. SEE DETAIL ON DWG. E9

ELECTRIC SERVICE POLE

DISCHARGE FLOW METER VAULT

POWER COMPANY TRANSFORMER. SEE NOTE 2

200KW NATURAL GAS EMERGENCY GENERATOR. SEE ELECTRICAL PLAN ON THIS DWG.

ELECTRICAL SITE PLAN

1"=10' (10' 5' 0 10' 20')

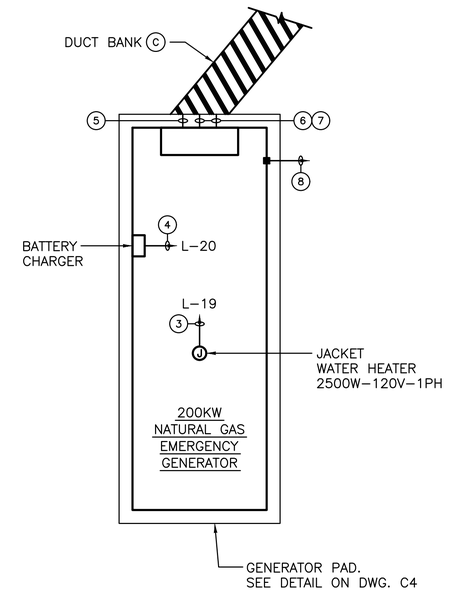

EMERGENCY GENERATOR ELECTRICAL PLAN

3/8"=1'–0" (24" 12" 0 2' 4' 6')

ALL DIMENSIONS AND EXISTING CONDITIONS SHALL BE CHECKED AND VERIFIED BY THE CONTRACTOR AT THE SITE.

PROFESSIONAL CERTIFICATION
I HEREBY CERTIFY THAT THESE DOCUMENTS WERE PREPARED OR APPROVED BY ME, AND THAT I AM A DULY LICENSED PROFESSIONAL ENGINEER UNDER THE LAWS OF THE STATE OF MARYLAND.
LICENSE NO. 50811 EXPIRATION DATE 06/14/2023
STATE OF MARYLAND · DAVID T. BOLLINGER · 50811 · PROFESSIONAL ENGINEER
1/23/23
RK&K
700 EAST PRATT STREET, SUITE 500
BALTIMORE, MARYLAND 21202
800.787.3755

NO.	DESCRIPTION	BY	DATE
	REVISIONS		

TOWN OF EMMITSBURG, MARYLAND
NEW CREAMERY ROAD SEWAGE PUMP STATION
EMMITSBURG, MARYLAND

ELECTRICAL SITE PLAN

ENGINEER	CHECKED BY
SMJ	DTB
DRAWN BY	DATE
SMJ	1/2023
RK&K PROJECT NUMBER	
19082	

DRAWING NUMBER
E2
SHEET NO. 42 OF 60

RK&K\CSYS – \\cd.rkk.com\US\Cloud\Projects\2019\19082_Creamery#2\Cadd\Plans\Elec\19082E2S-042-EP-E02.dwg Jan 27, 2023 – 8:39am Plot Scale 1:1

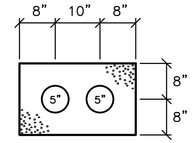

ELECTRIC SERVICE DUCT BANK

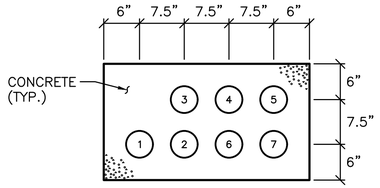

DUCT BANK (A)

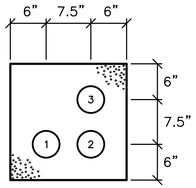

DUCT BANK (B)

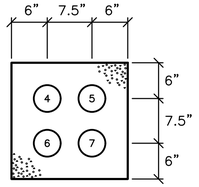

DUCT BANK (C)

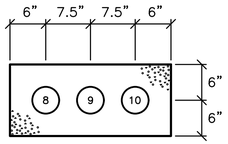

DUCT BANK (D)

DUCT BANK CONDUIT SCHEDULE

CONDUIT NO.	CONDUIT SIZE	CONDUIT MATERIAL	FROM	TO	VIA DUCT BANKS	CIRCUITS
1	3"	PVC	PAD MOUNTED POWER COMPANY TRANSFORMER	MCC-C	(A)(B)	MCC FEEDER (SET 1)
2	3"	PVC	PAD MOUNTED POWER COMPANY TRANSFORMER	MCC-C	(A)(B)	MCC FEEDER (SET 2)
3	3"	PVC	PAD MOUNTED POWER COMPANY TRANSFORMER	MCC-C	(A)(B)	SPARE
4	1"	PVC	EMERGENCY GENERATOR	ATS IN MCC-C	(A)(C)	GENERATOR START SIGNAL WIRING
5	1"	PVC	EMERGENCY GENERATOR	PUMP STATION CONTROL PANEL	(A)(C)	24VDC WIRING
6	4"	PVC	EMERGENCY GENERATOR	ATS IN MCC-C	(A)(C)	GENERATOR FEEDER
7	2"	PVC	EMERGENCY GENERATOR	PANEL "L" IN MCC-C	(A)(C)	120V POWER WIRING
8	1"	PVC	PUMP STATION DISCHARGE FLOW METER	PUMP STATION DISCHARGE FLOW METER TRANSMITTER	(D)	FLOW METER SIGNAL CABLE
9	1"	PVC	PUMP STATION DISCHARGE FLOW METER	PUMP STATION DISCHARGE FLOW METER TRANSMITTER	(D)	FLOW METER SIGNAL CABLE
10	1"	PVC	DISCHARGE FLOW METER VAULT FLOODING FLOAT SWITCH	PUMP STATION CONTROL PANEL	(D)	24VDC WIRING

ALL DIMENSIONS AND EXISTING CONDITIONS SHALL BE CHECKED AND VERIFIED BY THE CONTRACTOR AT THE SITE.

PROFESSIONAL CERTIFICATION

I HEREBY CERTIFY THAT THESE DOCUMENTS WERE PREPARED OR APPROVED BY ME, AND THAT I AM A DULY LICENSED PROFESSIONAL ENGINEER UNDER THE LAWS OF THE STATE OF MARYLAND.
LICENSE NO. 50811 EXPIRATION DATE 06/14/2023

RK&K
700 EAST PRATT STREET, SUITE 500
BALTIMORE, MARYLAND 21202
800.787.3755

NO.	DESCRIPTION	BY	DATE
	REVISIONS		

TOWN OF EMMITSBURG, MARYLAND
NEW CREAMERY ROAD SEWAGE PUMP STATION
EMMITSBURG, MARYLAND

DUCT BANK CROSS SECTIONS AND CONDUIT SCHEDULE

ENGINEER	CHECKED BY
SMJ	DTB
DRAWN BY	DATE
SMJ	1/2023
RK&K PROJECT NUMBER	
19082	

DRAWING NUMBER
E3
SHEET NO. 43 OF 60

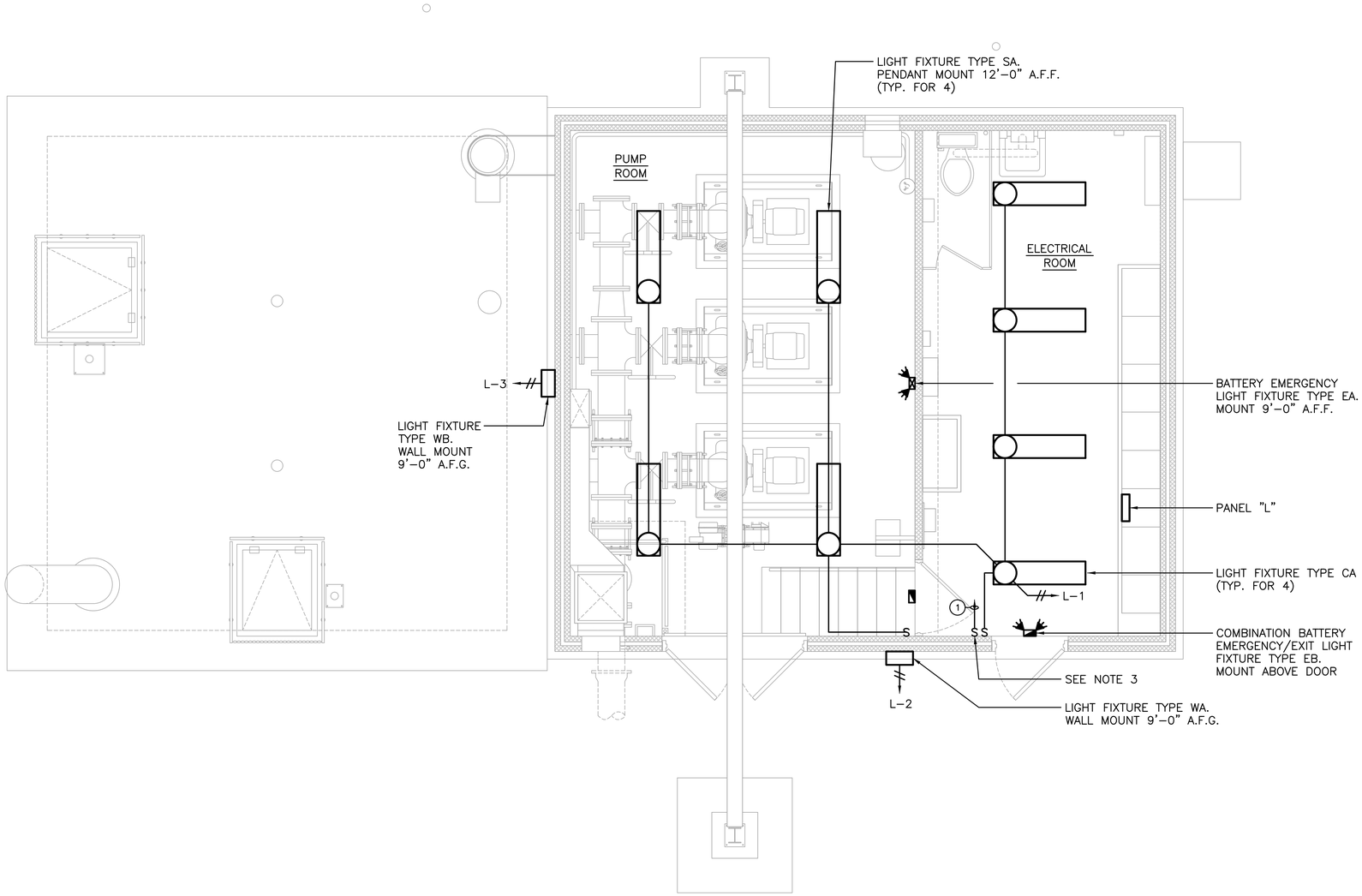

PUMP STATION – LIGHTING PLAN

3/8"=1'-0" 24" 12" 0 2' 4' 6'

NOTES

1. COORDINATE LOCATION OF LIGHT FIXTURES WITH PIPING, MONORAIL, AND HVAC EQUIPMENT TO AVOID INTERFERENCES.
2. WIRE ALL EMERGENCY LIGHT FIXTURES AND EXIT LIGHT FIXTURES TO THE LIGHTING CIRCUIT IN THE ROOM WHERE THEY ARE LOCATED.
3. PROVIDE AN ENGRAVED NAMEPLATE ON THE LIGHT SWITCH WHICH READS "WET WELL LIGHT".

WIRING LEGEND

1. 2#12-3/4"C TO WET WELL LIGHT FIXTURE TYPE WB.

ALL DIMENSIONS AND EXISTING CONDITIONS SHALL BE CHECKED AND VERIFIED BY THE CONTRACTOR AT THE SITE.

STATE OF MARYLAND
DITHY BOLLINGER
PROFESSIONAL ENGINEER
5081
1/25/23

PROFESSIONAL CERTIFICATION

I HEREBY CERTIFY THAT THESE DOCUMENTS WERE PREPARED OR APPROVED BY ME, AND THAT I AM A DULY LICENSED PROFESSIONAL ENGINEER UNDER THE LAWS OF THE STATE OF MARYLAND.
LICENSE NO. 50811 EXPIRATION DATE 06/14/2023

RK&K
700 EAST PRATT STREET, SUITE 500
BALTIMORE, MARYLAND 21202
800.787.3755

NO.	DESCRIPTION	BY	DATE
	REVISIONS		

TOWN OF EMMITSBURG, MARYLAND
NEW CREAMERY ROAD SEWAGE PUMP STATION
EMMITSBURG, MARYLAND

PUMP STATION
LIGHTING PLAN

ENGINEER	CHECKED BY
SMJ	DTB
DRAWN BY	DATE
SMJ	1/2023
RK&K PROJECT NUMBER	
19082	

DRAWING NUMBER
E4
SHEET NO. 44 OF 60

NOTES

1. ALL CONDUIT IN THE WET WELL SHALL BE PVC COATED GALVANIZED RIGID STEEL.
2. WALL MOUNT HOIST DISCONNECT ON AN ALUMINUM BACKBOARD FASTENED TO FIBERGLASS UNI–STRUT.
3. THE INFLUENT GRINDER CONTROL PANEL IS BEING FURNISHED BY THE INFLUENT GRINDER MANUFACTURER.
4. INSTALL TRANSDUCER IN A 4" SCH. 40 PVC PIPE WITH PERFORATED HOLES THROUGHOUT PIPE.
5. WIRE DOOR SWITCHES IN SERIES TO THE PUMP STATION CONTROL PANEL.

WIRING LEGEND

1. TELEPHONE SERVICE–1"C
2. TELEPHONE CABLE–1"C TO TELEPHONE BOX ON EXTERIOR WALL OF PUMP STATION
3. 16#14–1"C
4. 6#14–3/4"C
5. 3#12–3/4"C TO MCC–C
6. 3#10, #10 GRD.–3/4"C TO MCC–C
7. 1 PR. #18 SHLD.–3/4"C TO PUMP STATION CONTROL PANEL
8. TRANSDUCER CABLE–1"C
9. FLOAT SWITCH CABLES–2"C
10. 10#14–3/4"C TO PUMP STATION CONTROL PANEL
11. 42#14–2"C (24VDC) TO PUMP STATION CONTROL PANEL
12. (6) 1 PR. #18 SHLD.–1½"C TO PUMP STATION CONTROL PANEL
13. 2#14–3/4"C (120VAC) TO PUMP STATION CONTROL PANEL
14. 2#14–3/4"C (24VDC) TO PUMP STATION CONTROL PANEL

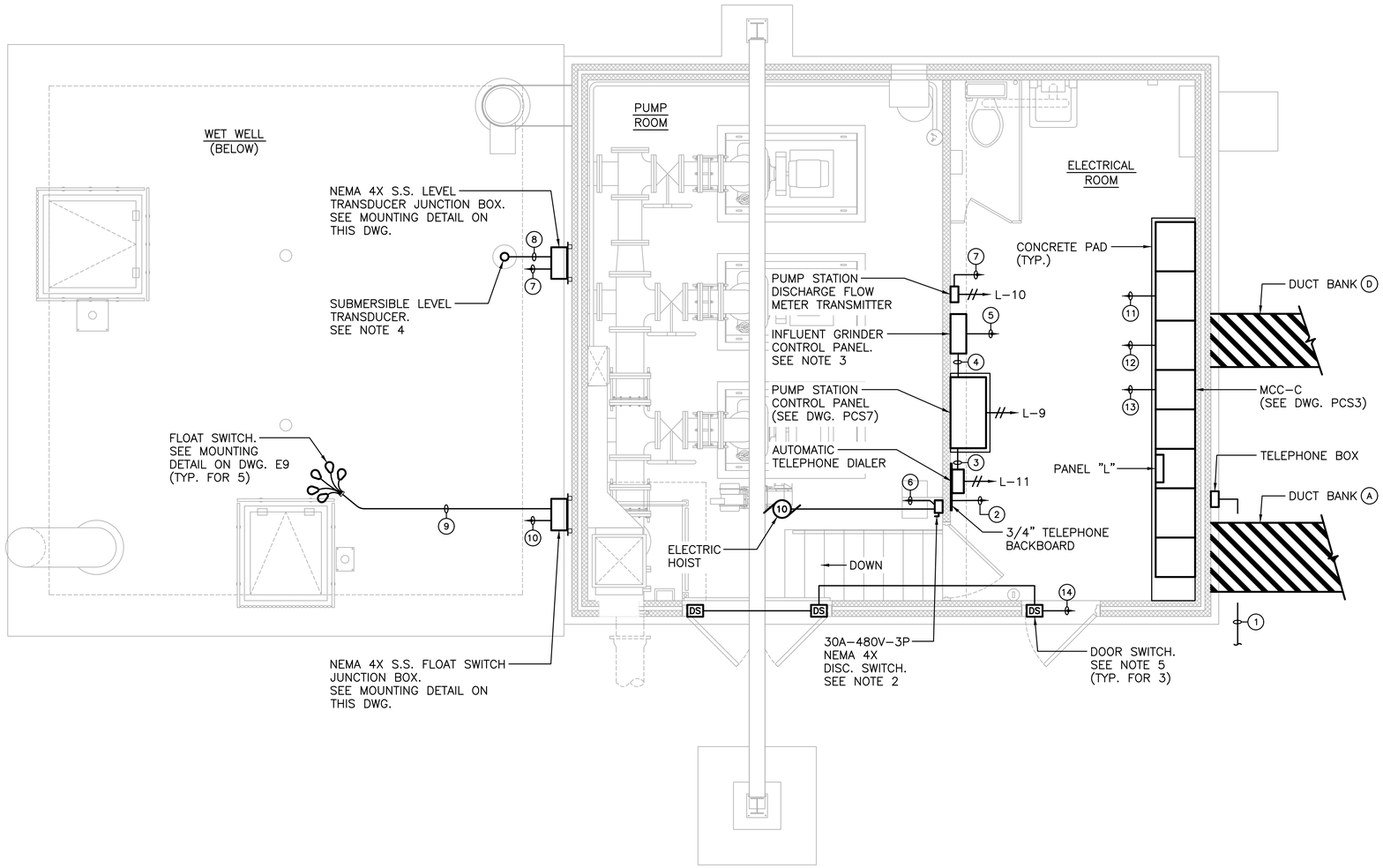

PUMP STATION – GRADE LEVEL POWER PLAN

3/8"=1'–0" (24" 12" 0 2' 4' 6')

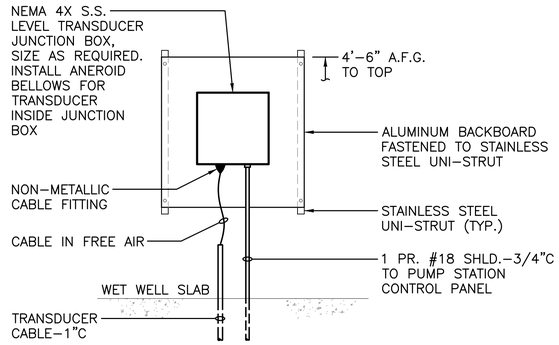

LEVEL TRANSDUCER JUNCTION BOX MOUNTING DETAIL

NO SCALE

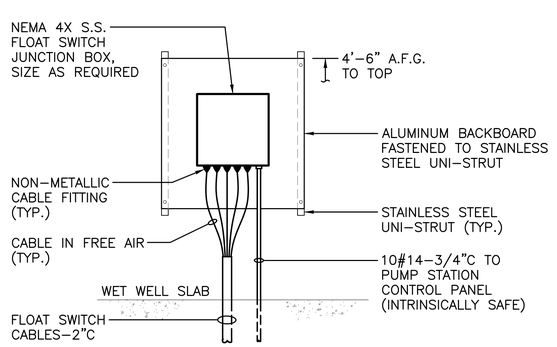

FLOAT SWITCH JUNCTION BOX MOUNTING DETAIL

NO SCALE

ALL DIMENSIONS AND EXISTING CONDITIONS SHALL BE CHECKED AND VERIFIED BY THE CONTRACTOR AT THE SITE.

RK&K
700 EAST PRATT STREET, SUITE 500
BALTIMORE, MARYLAND 21202
800.787.3755

PROFESSIONAL CERTIFICATION

I HEREBY CERTIFY THAT THESE DOCUMENTS WERE PREPARED OR APPROVED BY ME, AND THAT I AM A DULY LICENSED PROFESSIONAL ENGINEER UNDER THE LAWS OF THE STATE OF MARYLAND. LICENSE NO. 50811 EXPIRATION DATE 06/14/2023

STATE OF MARYLAND — DAVID T. BOLLINGER — 50811 — PROFESSIONAL ENGINEER — 1/23/23

NO.	REVISIONS	DESCRIPTION	BY	DATE

TOWN OF EMMITSBURG, MARYLAND
NEW CREAMERY ROAD SEWAGE PUMP STATION
EMMITSBURG, MARYLAND

PUMP STATION - GRADE LEVEL POWER PLAN

ENGINEER	CHECKED BY
SMJ	DTB
DRAWN BY	DATE
SMJ	1/2023
RK&K PROJECT NUMBER	
19082	

DRAWING NUMBER
E5
SHEET NO. 45 OF 60

RK&K 21 SYS – \\rkk.com\VA\Cloud\Projects\2019\19082_Cranmer\PCS\Cad\Plans\Elec\19082CR–DAS–FP–E05.dwg Jan 27, 2023 – 8:42pm Plot Scale 1:1

NOTES

1. ALL CONDUIT IN THE WET WELL SHALL BE PVC COATED GALVANIZED RIGID STEEL.
2. MOUNT E-STOP PUSH BUTTON STATION ON AN ALUMINUM BACKBOARD FASTENED TO FIBERGLASS UNI-STRUT.

WIRING LEGEND

1. 3#1, #6 GRD.-1½"C TO PUMP VFD IN MCC-C
2. 2#14-3/4"C FROM PUMP MOTOR THERMAL SWITCHES TO PUMP VFD IN MCC-C
3. 2#14-3/4"C TO PUMP VFD IN MCC-C
4. 2#14-3/4"C (24VDC) TO PUMP STATION CONTROL PANEL
5. 3#12-3/4"C TO INFLUENT GRINDER CONTROL PANEL

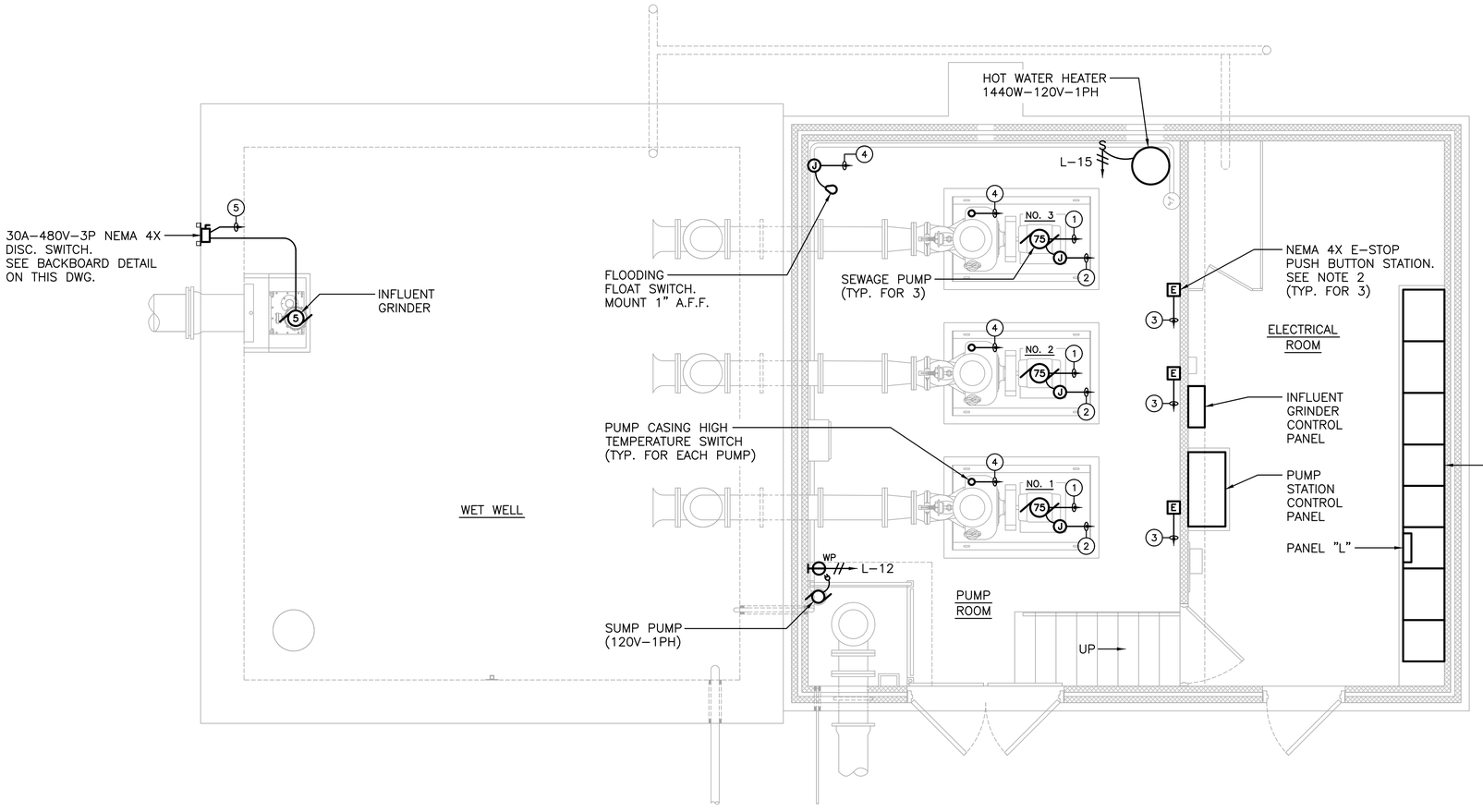

PUMP STATION – INTERMEDIATE LEVEL POWER PLAN

3/8"=1'-0" 24" 12" 0 2' 4' 6'

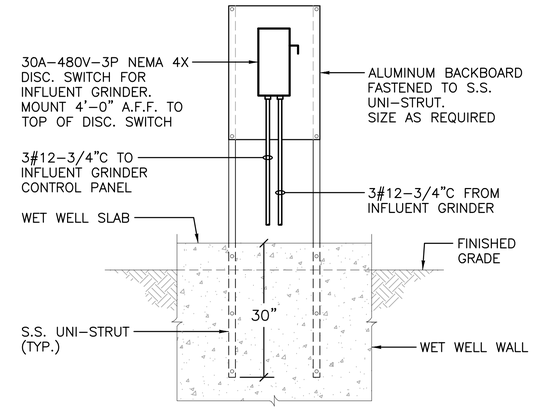

INFLUENT GRINDER DISCONNECT SWITCH ELECTRICAL BACKBOARD DETAIL

NO SCALE

ALL DIMENSIONS AND EXISTING CONDITIONS SHALL BE CHECKED AND VERIFIED BY THE CONTRACTOR AT THE SITE.

PROFESSIONAL CERTIFICATION

I HEREBY CERTIFY THAT THESE DOCUMENTS WERE PREPARED OR APPROVED BY ME, AND THAT I AM A DULY LICENSED PROFESSIONAL ENGINEER UNDER THE LAWS OF THE STATE OF MARYLAND.
LICENSE NO. 50811 EXPIRATION DATE 06/14/2023

RK&K
700 EAST PRATT STREET, SUITE 500
BALTIMORE, MARYLAND 21202
800.787.3755

NO.	DESCRIPTION	BY	DATE
	REVISIONS		

TOWN OF EMMITSBURG, MARYLAND
NEW CREAMERY ROAD SEWAGE PUMP STATION
EMMITSBURG, MARYLAND

PUMP STATION - INTERMEDIATE LEVEL POWER PLAN

ENGINEER	CHECKED BY
SMJ	DTB
DRAWN BY	DATE
SMJ	1/2023
RK&K PROJECT NUMBER	
19082	

DRAWING NUMBER
E6
SHEET NO. 46 OF 60

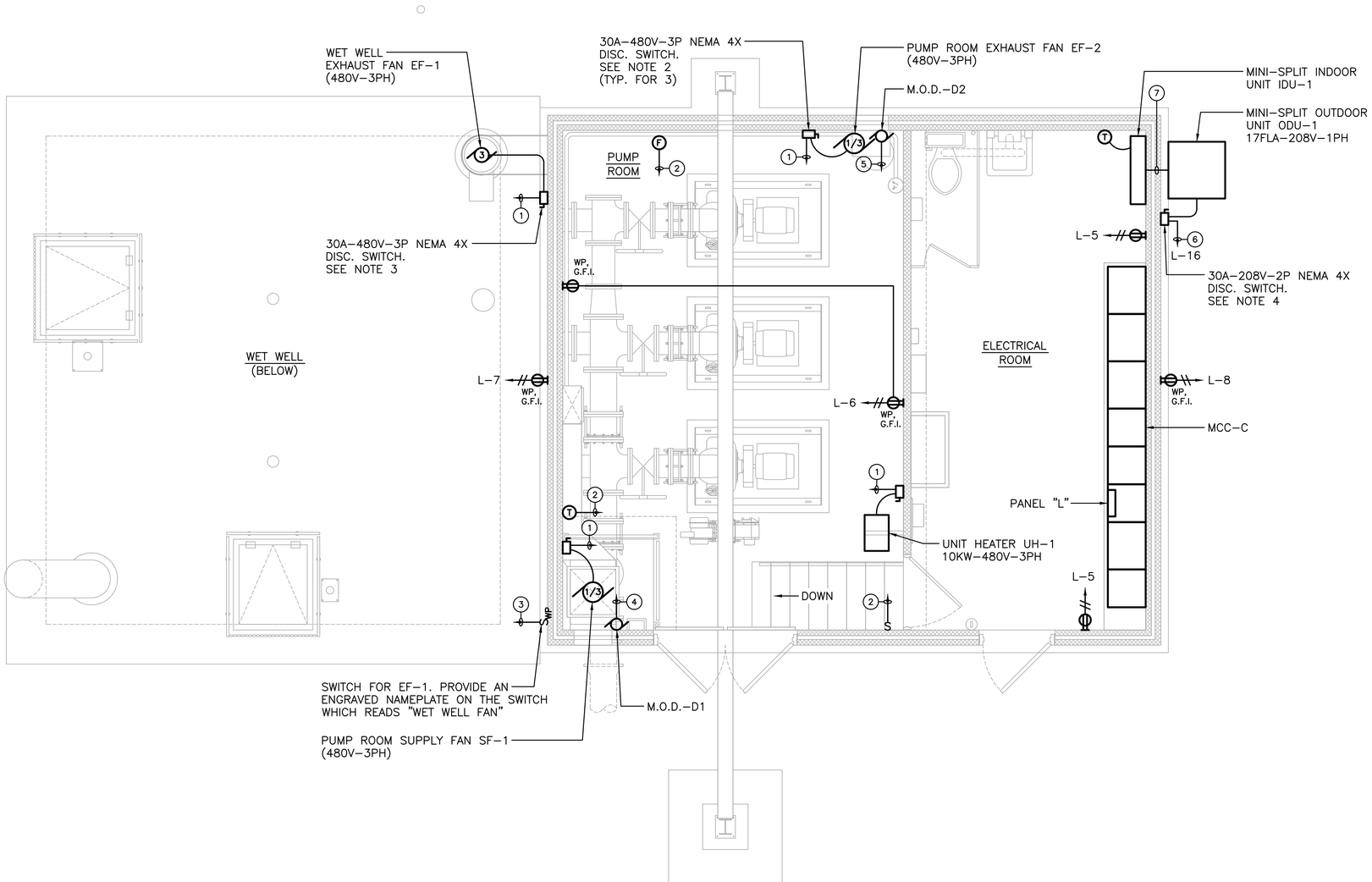

PUMP STATION
RECEPTACLE AND HVAC ELECTRICAL PLAN

3/8"=1'-0" 24" 12" 0 2' 4' 6'

NOTES

1. ALL CONDUIT IN THE WET WELL SHALL BE PVC COATED GALVANIZED RIGID STEEL.
2. WALL MOUNT SUPPLY FAN, EXHAUST FAN AND UNIT HEATER DISCONNECT SWITCHES ON AN ALUMINUM BACKBOARD FASTENED TO FIBERGLASS UNI-STRUT.
3. WALL MOUNT WET WELL EXHAUST FAN DISCONNECT SWITCH ON AN ALUMINUM BACKBOARD FASTENED TO STAINLESS STEEL UNI-STRUT.
4. WALL MOUNT MINI-SPLIT DISCONNECT SWITCH ON AN ALUMINUM BACKBOARD FASTENED TO STAINLESS STEEL UNI-STRUT.

WIRING LEGEND

1. 3#12-3/4"C TO MCC-C
2. 2#14-3/4"C TO SF-1 STARTER IN MCC-C
3. 2#14-3/4"C TO EF-1 STARTER IN MCC-C
4. 4#14-3/4"C FOR M.O.D. POWER AND LIMIT SWITCH WIRING TO SF-1 STARTER IN MCC-C
5. 4#14-3/4"C FOR M.O.D. POWER AND LIMIT SWITCH WIRING TO EF-2 STARTER IN MCC-C
6. 2#10, #10 GRD.-3/4"C TO PANEL "L"
7. 3/4"C FOR POWER WIRING TO INDOOR UNIT. COORDINATE WIRING REQUIREMENTS WITH MINI-SPLIT SYSTEM MANUFACTURER

ALL DIMENSIONS AND EXISTING CONDITIONS SHALL BE CHECKED AND VERIFIED BY THE CONTRACTOR AT THE SITE.

PROFESSIONAL CERTIFICATION

I HEREBY CERTIFY THAT THESE DOCUMENTS WERE PREPARED OR APPROVED BY ME, AND THAT I AM A DULY LICENSED PROFESSIONAL ENGINEER UNDER THE LAWS OF THE STATE OF MARYLAND.
LICENSE NO. 50811 EXPIRATION DATE 06/14/2023

RK&K
700 EAST PRATT STREET, SUITE 500
BALTIMORE, MARYLAND 21202
800.787.3755

NO.	DESCRIPTION	BY	DATE
	REVISIONS		

TOWN OF EMMITSBURG, MARYLAND
NEW CREAMERY ROAD SEWAGE PUMP STATION
EMMITSBURG, MARYLAND

PUMP STATION
RECEPTACLE AND HVAC ELECTRICAL PLAN

ENGINEER	CHECKED BY
SMJ	DTB
DRAWN BY	DATE
SMJ	1/2023
RK&K PROJECT NUMBER	
19082	

DRAWING NUMBER
E7
SHEET NO. 47 OF 60

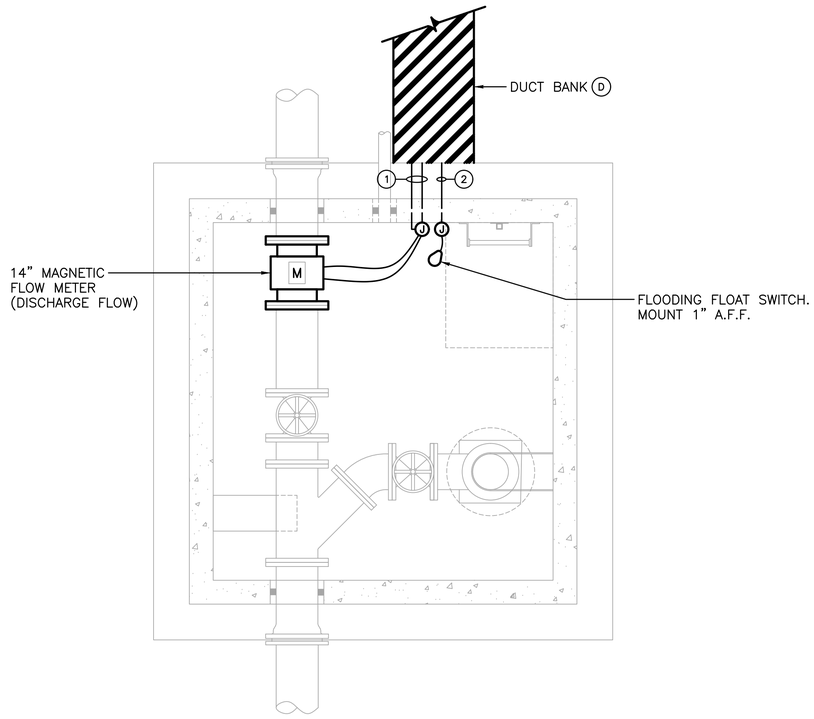

PUMP STATION
DISCHARGE FLOW METER VAULT
ELECTRICAL PLAN

NORTH

1/2"=1'-0"

12" 0 1' 2' 3' 4' 5'

NOTES

1. ALL CONDUIT IN THE FLOW METER VAULT SHALL BE PVC COATED GALVANIZED RIGID STEEL.

WIRING LEGEND

(1) FLOW METER SIGNAL CABLES TO FLOW METER TRANSMITTER IN PUMP STATION. RUN IN DUCT BANK CONDUIT NOS. 8 AND 9

(2) 2#14 (24VDC) TO PUMP STATION CONTROL PANEL. RUN IN DUCT BANK CONDUIT NO. 10

ALL DIMENSIONS AND EXISTING CONDITIONS
SHALL BE CHECKED AND VERIFIED BY THE CONTRACTOR AT THE SITE.

RK&K\\3\3\5 - \\rk4k.com\16\Cloud\Projects\2019\19082_Creamery\PS\Civil\Plans\Elec\19082PS-048-EP-E08.dwg Jan 27, 2023 - 8:44am Plot Scale 1:1

PROFESSIONAL CERTIFICATION
I HEREBY CERTIFY THAT THESE DOCUMENTS WERE PREPARED OR APPROVED BY ME, AND THAT I AM A DULY LICENSED PROFESSIONAL ENGINEER UNDER THE LAWS OF THE STATE OF MARYLAND.
LICENSE NO. 50811
EXPIRATION DATE 06/14/2023
RK&K
700 EAST PRATT STREET, SUITE 500
BALTIMORE, MARYLAND 21202
800.787.3755

NO.	DESCRIPTION	BY	DATE
	REVISIONS		

TOWN OF EMMITSBURG, MARYLAND
NEW CREAMERY ROAD SEWAGE PUMP STATION
EMMITSBURG, MARYLAND

PUMP STATION DISCHARGE FLOW METER VAULT
ELECTRICAL PLAN

ENGINEER	CHECKED BY
SMJ	DTB
DRAWN BY	DATE
SMJ	1/2023
RK&K PROJECT NUMBER	
19082	

DRAWING NUMBER
E8

SHEET NO. 48 OF 60

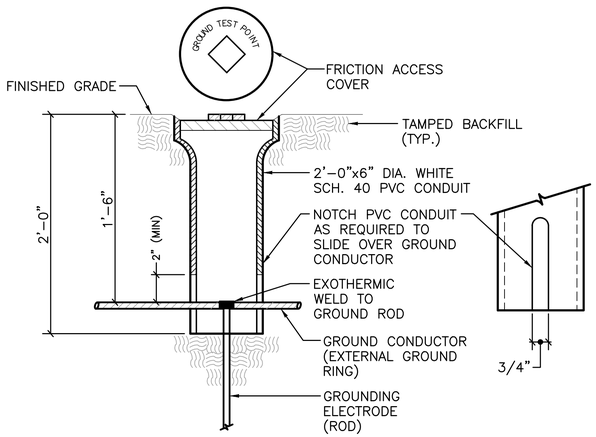

GROUND TEST POINT DETAIL

NO SCALE

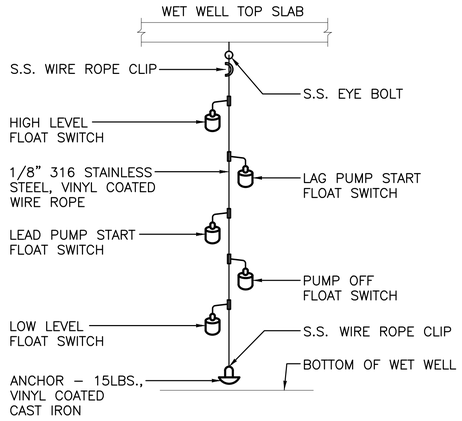

FLOAT SWITCH MOUNTING DETAIL

NO SCALE

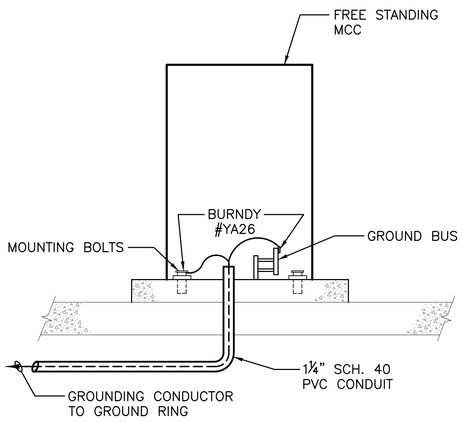

MCC ENCLOSURE GROUNDING DETAIL

NO SCALE

ALL DIMENSIONS AND EXISTING CONDITIONS SHALL BE CHECKED AND VERIFIED BY THE CONTRACTOR AT THE SITE.

PROFESSIONAL CERTIFICATION

I HEREBY CERTIFY THAT THESE DOCUMENTS WERE PREPARED OR APPROVED BY ME, AND THAT I AM A DULY LICENSED PROFESSIONAL ENGINEER UNDER THE LAWS OF THE STATE OF MARYLAND.
LICENSE NO. 50811 EXPIRATION DATE 06/14/2023

RK&K
700 EAST PRATT STREET, SUITE 500
BALTIMORE, MARYLAND 21202
800.787.3755

NO.	DESCRIPTION	BY	DATE
	REVISIONS		

TOWN OF EMMITSBURG, MARYLAND
NEW CREAMERY ROAD SEWAGE PUMP STATION
EMMITSBURG, MARYLAND

ELECTRICAL DETAILS

ENGINEER	CHECKED BY
SMJ	DTB
DRAWN BY	DATE
SMJ	1/2023
RK&K PROJECT NUMBER	
19082	

DRAWING NUMBER
E9
SHEET NO. 49 OF 60

ABBREVIATIONS

A	—	AMPS	mA	—	MILLIAMP
AC	—	ALTERNATING CURRENT	MCC	—	MOTOR CONTROL CENTER
ALT.	—	ALTERNATE	MCP	—	MOTOR CIRCUIT PROTECTOR
AUX.	—	AUXILIARY	MS.	—	MOTOR STARTER
BLDG.	—	BUILDING	N	—	NEUTRAL
CP	—	CONTROL PANEL	NO.	—	NUMBER
D	—	DEEP	OIT	—	OPERATOR INTERFACE TERMINAL
DC	—	DIRECT CURRENT	P	—	POLE
DISC.	—	DISCONNECT	PCS	—	PUMP CONTROL SYSTEM
DWG.	—	DRAWING	PH	—	PHASE
EXIST.	—	EXISTING	PLC	—	PROGRAMMABLE LOGIC CONTROLLER
FT	—	FEET	SHLD.	—	SHIELDED
GRD.	—	GROUND	SPD	—	SURGE PROTECTIVE DEVICE
H	—	HIGH	S.S.	—	STAINLESS STEEL
H/O/A	—	HAND/OFF/AUTO	TEMP.	—	TEMPERATURE
HP	—	HORSEPOWER	T–M	—	THERMAL MAGNETIC
IC	—	ISOLATION CONTACTOR	TYP.	—	TYPICAL
I/O	—	INPUT/OUTPUT	UPS	—	UNINTERRUPTIBLE POWER SUPPLY
J–BOX	—	JUNCTION BOX	V	—	VOLTS
KV	—	KILOVOLT	VFD	—	VARIABLE FREQUENCY DRIVE
KW	—	KILOWATT	W	—	WIDE, WIRE
L	—	LOW, LINE			

ALLEN–BRADLEY CompactLogix LEGEND

5069–L330ER	—	PROGRAMMABLE CONTROLLER
5069–IQ16	—	16 POINT 24VDC INPUT MODULE
5069–OB8	—	8 POINT 24VDC RELAY OUTPUT MODULE
5069–IF8	—	8 POINT ANALOG INPUT MODULE
5069–OF4	—	4 POINT ANALOG OUTPUT MODULE

ALL DIMENSIONS AND EXISTING CONDITIONS SHALL BE CHECKED AND VERIFIED BY THE CONTRACTOR AT THE SITE.

SYMBOLS

- 3 POSITION SELECTOR SWITCH (X INDICATES CLOSED POSITION)
- NORMALLY OPEN PUSH BUTTON
- NORMALLY CLOSED PUSH BUTTON
- NORMALLY OPEN CONTACT
- NORMALLY CLOSED CONTACT
- (M) MOTOR STARTER COIL
- (C) CONTACTOR COIL
- (CR) CONTROL RELAY
- MOTOR THERMAL SWITCH
- THERMOSTAT
- PRESSURE SWITCH–NORMALLY OPEN
- SELECTOR SWITCH
- (A) PUSH–TO–TEST PILOT LIGHT–LENS COLOR IS INDICATED BY LETTER INSIDE
  - A – AMBER
  - B – BLUE
  - C – GREEN
  - R – RED
  - W – WHITE

- ETM ELAPSED TIME METER
- ENGRAVED NAMEPLATE
- (B) PUSH BUTTON – BUTTON COLOR IS INDICATED BY LETTER INSIDE
  - B – BLUE
  - G – GREEN
  - R – RED
  - O – ORANGE
  - W – WHITE
  - Y – YELLOW
  - BLANK – BLACK
- CONTROL PANEL CIRCUIT BREAKER
- (5) MOTOR (NUMBER INDICATES HP)
- SOLENOID VALVE
- ISR INTRINSICALLY SAFE RELAY
- 480V / 120V CONTROL TRANSFORMER
- FUSE
- FLOAT SWITCH
- FLOW SWITCH
- MOTOR STARTER
- THERMAL OVERLOAD
- DISCONNECT SWITCH

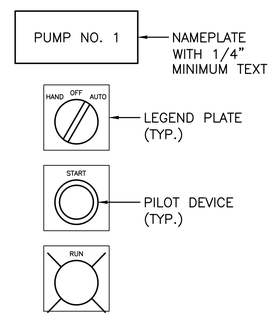

TYPICAL PILOT DEVICE LAYOUT

LEGEND

- TERMINAL IN VFD FOR FIELD WIRING
- TERMINAL IN MCC FOR FIELD WIRING
- TERMINAL IN SUBSTATION FOR FIELD WIRING
- TERMINAL IN VALVE ACTUATOR FOR FIELD WIRING
- TERMINAL IN I/O WIRING JUNCTION BOX FOR FIELD WIRING
- TERMINAL IN CONTROL PANEL FOR FIELD WIRING
- INDICATES WIRING IN CONTROL PANEL
- INDICATES FIELD WIRING
- GROUND
- CONNECTING WIRES

NOTES

1. EXISTING EQUIPMENT IS SHOWN IN A LIGHT WEIGHT AND IDENTIFIED WITH SLANTED LETTERING. NEW EQUIPMENT AND WIRING IS SHOWN BOLD.
2. COORDINATE SIZE OF ALL BREAKERS, MOTOR STARTERS AND VFDs WITH ACTUAL HORSEPOWERS OF EQUIPMENT BEING FURNISHED.
3. PROVIDE AN ENGRAVED NAMEPLATE ON MCC BUCKETS WHERE A FOREIGN VOLTAGE FROM AN EXTERNAL SOURCE IS PRESENT. NAMEPLATE SHALL BE RED WITH WHITE TEXT AND SHALL BE ENGRAVED AS FOLLOWS: "A FOREIGN VOLTAGE FROM AN EXTERNAL SOURCE IS PRESENT IN THIS MCC BUCKET. DISCONNECT ALL SOURCES OF POWER BEFORE SERVICING THE EQUIPMENT".
4. ALL WIRING SHALL CONFIRM TO THE FOLLOWING COLOR CODE:

120 VOLT, 1 PHASE:	BLACK – PHASE WIRE WHITE – NEUTRAL WIRE
CONTROL WIRES:	120VAC – RED 24VDC – BLUE EXTERNAL POWER SOURCE – YELLOW
GROUND WIRES:	GREEN

RK&K
700 EAST PRATT STREET, SUITE 500
BALTIMORE, MARYLAND 21202
800.787.3755

PROFESSIONAL CERTIFICATION

I HEREBY CERTIFY THAT THESE DOCUMENTS WERE PREPARED OR APPROVED BY ME, AND THAT I AM A DULY LICENSED PROFESSIONAL ENGINEER UNDER THE LAWS OF THE STATE OF MARYLAND. LICENSE NO. 50811 EXPIRATION DATE 06/14/2023

STATE OF MARYLAND — STEVE M. JOHNSON — 50811 — PROFESSIONAL ENGINEER — 1/27/23

NO.	DESCRIPTION	BY	DATE
	REVISIONS		

TOWN OF EMMITSBURG, MARYLAND
NEW CREAMERY ROAD SEWAGE PUMP STATION
EMMITSBURG, MARYLAND

PUMP CONTROL SYSTEM
ABBREVIATIONS, SYMBOLS, AND LEGEND

ENGINEER	CHECKED BY
SMJ	DTB
DRAWN BY	DATE
SMJ	1/2023
RK&K PROJECT NUMBER	
19082	

DRAWING NUMBER
PCS1
SHEET NO. 50 OF 60

RK231.SYS = \\rkk.com\10\Cloud\Projects\2019\19082_Creamery\PCS\Civil\Plans\Elec\19082R-050-EP-#PCS01.dwg Jan 27, 2023 - 8:44am Plot Scale 1:1

NOTES

1. ALL MODEL NUMBERS SHOWN ARE ALLEN–BRADLEY MODEL NUMBERS.

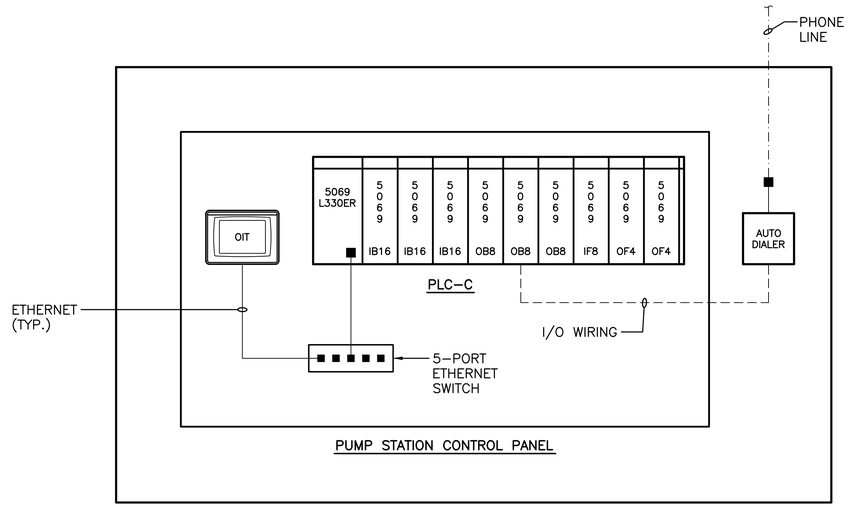

PUMP STATION

ALL DIMENSIONS AND EXISTING CONDITIONS SHALL BE CHECKED AND VERIFIED BY THE CONTRACTOR AT THE SITE.

PROFESSIONAL CERTIFICATION

I HEREBY CERTIFY THAT THESE DOCUMENTS WERE PREPARED OR APPROVED BY ME, AND THAT I AM A DULY LICENSED PROFESSIONAL ENGINEER UNDER THE LAWS OF THE STATE OF MARYLAND.
LICENSE NO. 50811 EXPIRATION DATE 06/14/2023

RK&K
700 EAST PRATT STREET, SUITE 500
BALTIMORE, MARYLAND 21202
800.787.3755

NO.	DESCRIPTION	BY	DATE
	REVISIONS		

TOWN OF EMMITSBURG, MARYLAND
NEW CREAMERY ROAD SEWAGE PUMP STATION
EMMITSBURG, MARYLAND

PLC ARCHITECTURE

ENGINEER	CHECKED BY
SMJ	DTB
DRAWN BY	DATE
SMJ	1/2023
RK&K PROJECT NUMBER	
19082	

DRAWING NUMBER
PCS2
SHEET NO. 51 OF 60

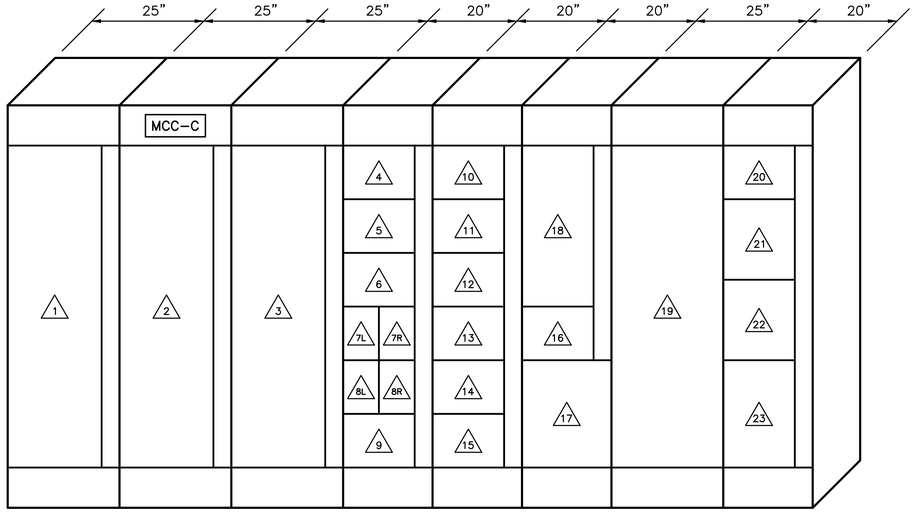

MCC–C ELEVATION
NO SCALE

NOTES

1. MAIN BREAKER SHALL BE SERVICE ENTRANCE RATED AND FURNISHED WITH G.F.I. PROTECTION.
2. "MCC–C" NAMEPLATE SHALL HAVE 2" HIGH LETTERS.

UNIT LOCATION	DESCRIPTION
1	SEWAGE PUMP NO. 1
2	SEWAGE PUMP NO. 2
3	SEWAGE PUMP NO. 3
4	PUMP ROOM SUPPLY FAN SF–1
5	PUMP ROOM EXHAUST FAN EF–2
6	WET WELL EXHAUST FAN EF–1
7L	20A–3P SPARE
7R	20A–3P SPARE
8L	30A–3P SPARE
8R	50A–3P SPARE
9	SPACE
10	INFLUENT GRINDER CONTROL PANEL
11	ELECTRIC HOIST

UNIT LOCATION	DESCRIPTION
12	UNIT HEATER UH–1
13	SPACE
14	SPACE
15	SPACE
16	PANEL "L" TRANSFORMER CIRCUIT BREAKER
17	PANEL "L" TRANSFORMER
18	PANEL "L"
19	600A AUTOMATIC TRANSFER SWITCH
20	SPACE
21	SURGE PROTECTIVE DEVICE
22	POWER MONITOR
23	600A MAIN BREAKER

PANELBOARD "L" SCHEDULE

VOLTAGE: 120/208V–3PH–4W
MAIN BUS BARS AND LUGS: 100A
MAIN BREAKER: NONE

PANEL TYPE: MCC MOUNTED, BREAKER
MIN. A.I.C. RATING: 10,000
LOCATION: MCC–C

NOTES	HP	WATTS	LOCATION	POLE	AMP/TRIP			AMP/TRIP	POLE	LOCATION	WATTS	HP	NOTES
LIGHTS		600	ELEC. ROOM	1	20	1	2	20	1	OUTSIDE	105		EXTERIOR LIGHT
EXTERIOR LIGHT		105	OUTSIDE	1	20	3	4	20	1				SPARE
RECEPTACLES		400	ELEC. ROOM	1	20	5	6	20	1	PUMP ROOM	400		RECEPTACLES
RECEPTACLE		200	OUTSIDE	1	20	7	8	20	1	OUTSIDE	200		RECEPTACLE
PUMP STATION CONTROL PANEL		1000	ELEC. ROOM	1	20	9	10	20	1	ELEC. ROOM	500		PUMP STATION DISCHARGE FLOW METER TRANSMITTER
AUTOMATIC TELEPHONE DIALER		500	ELEC. ROOM	1	20	11	12	20	1	PUMP ROOM	200		SUMP PUMP RECEPTACLE
SPARE				1	20	13	14	20	1				SPARE
HOT WATER HEATER		1440	PUMP ROOM	1	20	15	16	30	2	OUTSIDE		17 FLA	MINI–SPLIT OUTDOOR UNIT ODU–1
SPARE				1	20	17							
JACKET WATER HEATER		2500	GEN.	1	30	19	20	20	1	GEN.	200		BATTERY CHARGER
SPARE				1	20	21	22	20	1				SPARE
SPARE				1	20	23	24	20	1				SPARE
SPACE						25	26						SPACE
SPACE						27	28						SPACE
SPACE						29	30						SPACE

ALL DIMENSIONS AND EXISTING CONDITIONS SHALL BE CHECKED AND VERIFIED BY THE CONTRACTOR AT THE SITE.

RK231.SYS – \\pdr4k.com\fs\Cloud\Projects\2019\19082_Creamery\PS\Cad\Plans\Elec\19082E-052-EP-PCS03.dwg Jan 27, 2023 - 8:45am Plot Scale 1:1

PROFESSIONAL CERTIFICATION
I HEREBY CERTIFY THAT THESE DOCUMENTS WERE PREPARED OR APPROVED BY ME, AND THAT I AM A DULY LICENSED PROFESSIONAL ENGINEER UNDER THE LAWS OF THE STATE OF MARYLAND.
LICENSE NO. 50811
EXPIRATION DATE 06/14/2023
STATE OF MARYLAND · DAVID T. BOLLINGER · 50811 · PROFESSIONAL ENGINEER
1/25/23
RK&K
700 EAST PRATT STREET, SUITE 500
BALTIMORE, MARYLAND 21202
800.787.3755

NO.	DESCRIPTION	BY	DATE
	REVISIONS		

TOWN OF EMMITSBURG, MARYLAND
NEW CREAMERY ROAD SEWAGE PUMP STATION
EMMITSBURG, MARYLAND

MCC-C ELEVATION

ENGINEER	CHECKED BY
SMJ	DTB
DRAWN BY	DATE
SMJ	1/2023
RK&K PROJECT NUMBER	
19082	

DRAWING NUMBER
PCS3
SHEET NO. 52 OF 60

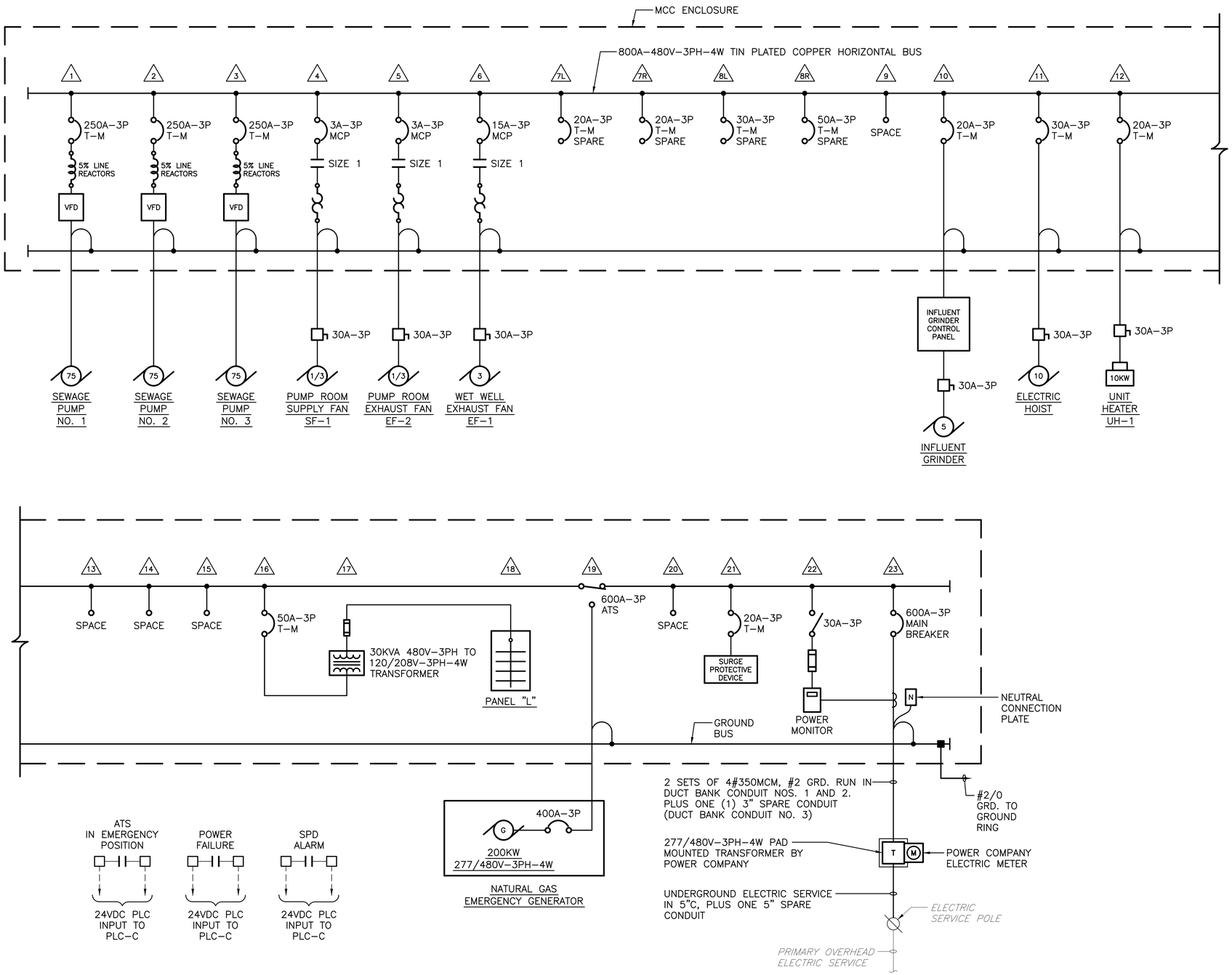

ALL DIMENSIONS AND EXISTING CONDITIONS SHALL BE CHECKED AND VERIFIED BY THE CONTRACTOR AT THE SITE.

STATE OF MARYLAND
DITHY BOLLINGER
PROFESSIONAL ENGINEER
5081
1/25/23

PROFESSIONAL CERTIFICATION

I HEREBY CERTIFY THAT THESE DOCUMENTS WERE PREPARED OR APPROVED BY ME, AND THAT I AM A DULY LICENSED PROFESSIONAL ENGINEER UNDER THE LAWS OF THE STATE OF MARYLAND.
LICENSE NO. 50811 EXPIRATION DATE 06/14/2023

RK&K
700 EAST PRATT STREET, SUITE 500
BALTIMORE, MARYLAND 21202
800.787.3755

NO.	DESCRIPTION	BY	DATE
	REVISIONS		

TOWN OF EMMITSBURG, MARYLAND
NEW CREAMERY ROAD SEWAGE PUMP STATION
EMMITSBURG, MARYLAND

MCC-C ONE-LINE DIAGRAM

ENGINEER	CHECKED BY
SMJ	DTB
DRAWN BY	DATE
SMJ	1/2023
RK&K PROJECT NUMBER	
19082	

DRAWING NUMBER
PCS4
SHEET NO. 53 OF 60

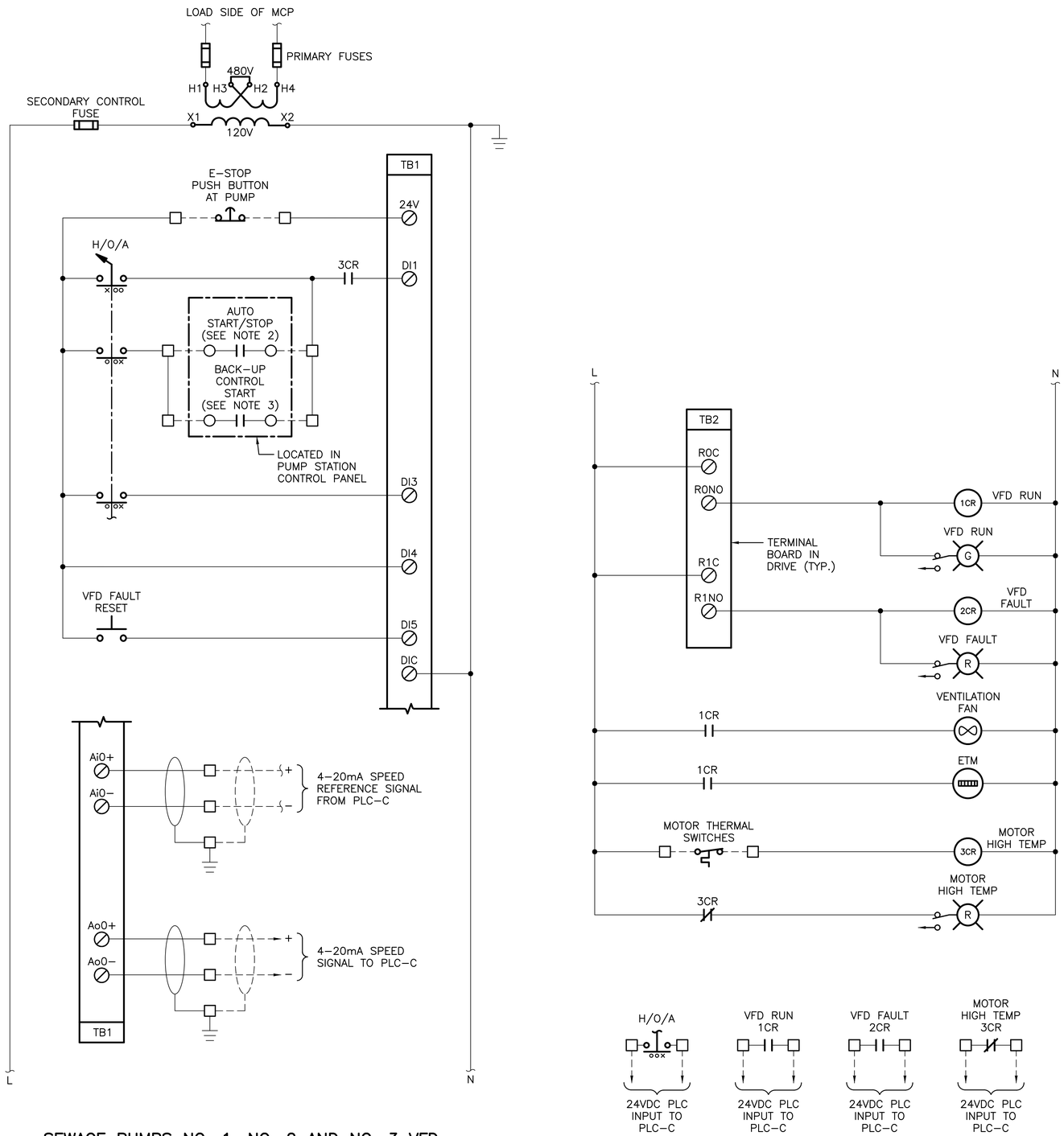

SEWAGE PUMPS NO. 1, NO. 2 AND NO. 3 VFD CONTROL WIRING DIAGRAM

NOTES

1. COORDINATE VFD CONTROL WIRING WITH THE VFD MANUFACTURER.
2. THE SEWAGE PUMP AUTO START/STOP RELAY CONTACTS ARE AS FOLLOWS:

   SEWAGE PUMP NO. 1 – 6CR
   SEWAGE PUMP NO. 2 – 14CR
   SEWAGE PUMP NO. 3 – 22CR

3. THE SEWAGE PUMP BACK-UP CONTROL START RELAY CONTACTS ARE AS FOLLOWS:

   SEWAGE PUMP NO. 1 – 3CR
   SEWAGE PUMP NO. 2 – 4CR
   SEWAGE PUMP NO. 3 – 5CR

ALL DIMENSIONS AND EXISTING CONDITIONS SHALL BE CHECKED AND VERIFIED BY THE CONTRACTOR AT THE SITE.

PROFESSIONAL CERTIFICATION

I HEREBY CERTIFY THAT THESE DOCUMENTS WERE PREPARED OR APPROVED BY ME, AND THAT I AM A DULY LICENSED PROFESSIONAL ENGINEER UNDER THE LAWS OF THE STATE OF MARYLAND.
LICENSE NO. 50811 EXPIRATION DATE 06/14/2023

RK&K
700 EAST PRATT STREET, SUITE 500
BALTIMORE, MARYLAND 21202
800.787.3755

NO.	DESCRIPTION	BY	DATE
	REVISIONS		

TOWN OF EMMITSBURG, MARYLAND
NEW CREAMERY ROAD SEWAGE PUMP STATION
EMMITSBURG, MARYLAND

MCC-C
CONTROL WIRING DIAGRAMS

ENGINEER	CHECKED BY
SMJ	DTB
DRAWN BY	DATE
SMJ	1/2023
RK&K PROJECT NUMBER	
19082	

DRAWING NUMBER
PCS5
SHEET NO. 54 OF 60

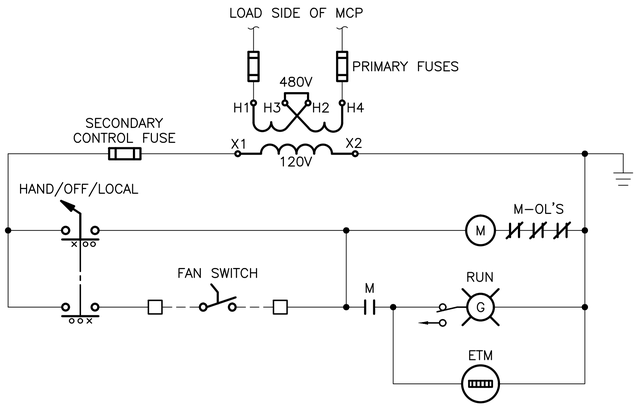

WET WELL EXHAUST FAN EF-1
CONTROL WIRING DIAGRAM

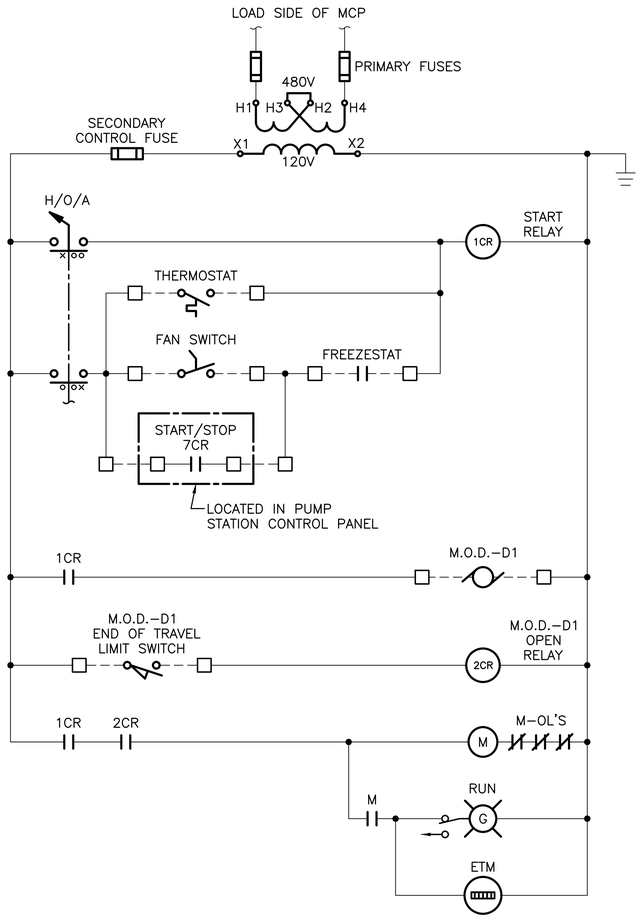

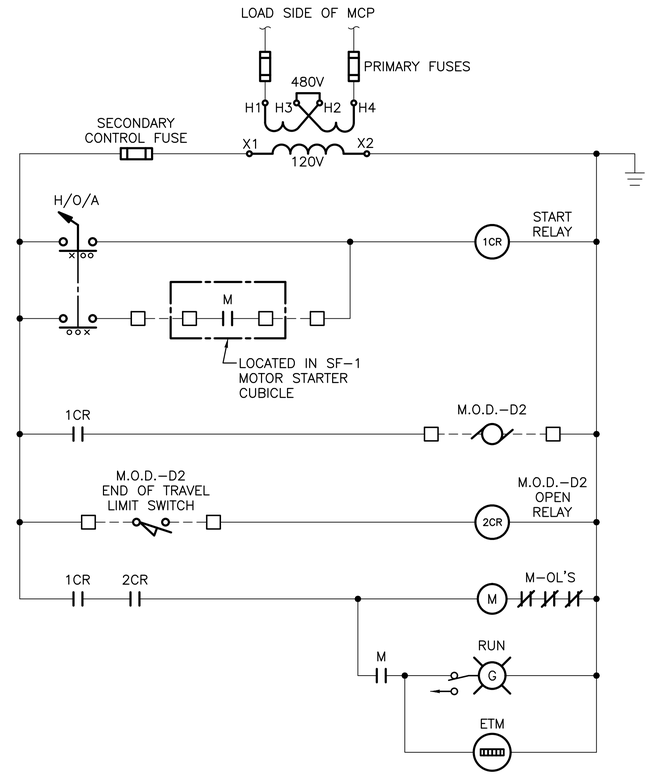

PUMP ROOM EXHAUST FAN EF-2
CONTROL WIRING DIAGRAM

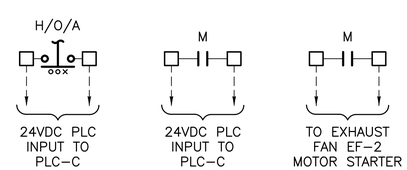

PUMP ROOM SUPPLY FAN SF-1
CONTROL WIRING DIAGRAM

ALL DIMENSIONS AND EXISTING CONDITIONS
SHALL BE CHECKED AND VERIFIED BY THE CONTRACTOR AT THE SITE.

PROFESSIONAL CERTIFICATION

I HEREBY CERTIFY THAT THESE DOCUMENTS WERE PREPARED OR APPROVED BY ME, AND THAT I AM A DULY LICENSED PROFESSIONAL ENGINEER UNDER THE LAWS OF THE STATE OF MARYLAND.
LICENSE NO. 50811 EXPIRATION DATE 06/14/2023

RK&K
700 EAST PRATT STREET, SUITE 500
BALTIMORE, MARYLAND 21202
800.787.3755

NO.	DESCRIPTION	BY	DATE
	REVISIONS		

TOWN OF EMMITSBURG, MARYLAND
NEW CREAMERY ROAD SEWAGE PUMP STATION
EMMITSBURG, MARYLAND

MCC-C
CONTROL WIRING DIAGRAMS

ENGINEER	CHECKED BY
SMJ	DTB
DRAWN BY	DATE
SMJ	1/2023
RK&K PROJECT NUMBER	
19082	

DRAWING NUMBER
PCS6
SHEET NO. 55 OF 60

NOTES

1. PLC PANEL NAMEPLATE SHALL BE ENGRAVED WITH 1" HIGH LETTERS.

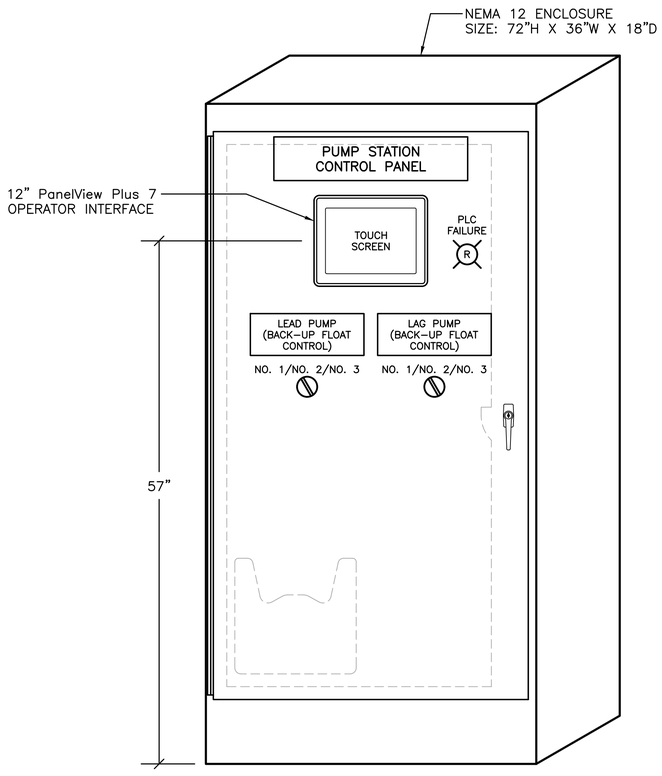

PUMP STATION CONTROL PANEL
PANEL LAYOUT

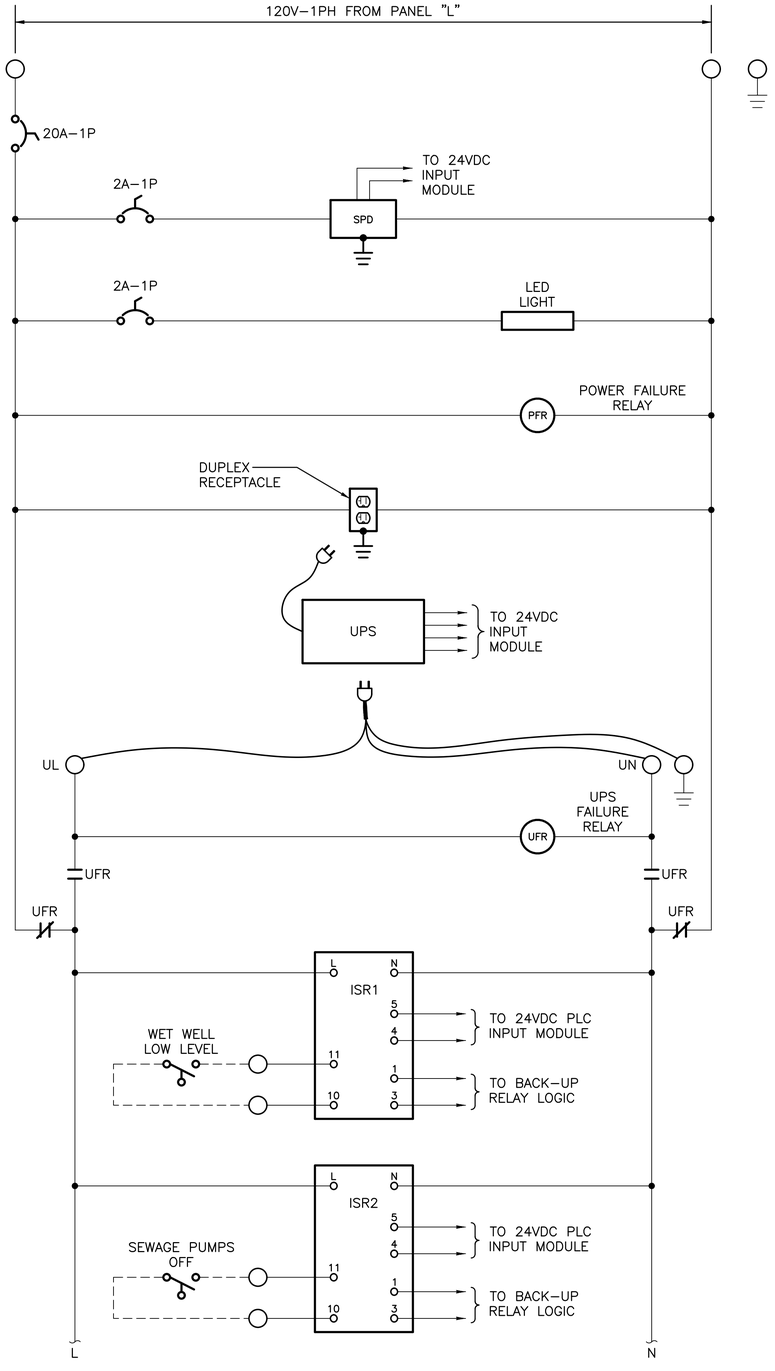

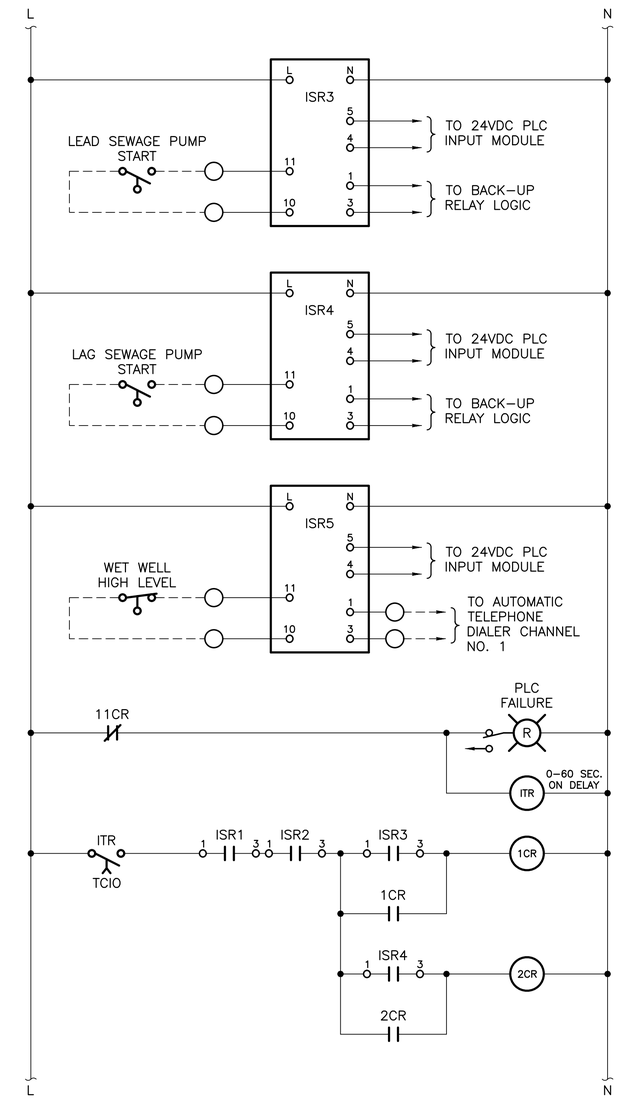

ALL DIMENSIONS AND EXISTING CONDITIONS
SHALL BE CHECKED AND VERIFIED BY THE CONTRACTOR AT THE SITE.

PROFESSIONAL CERTIFICATION

I HEREBY CERTIFY THAT THESE DOCUMENTS WERE PREPARED OR APPROVED BY ME, AND THAT I AM A DULY LICENSED PROFESSIONAL ENGINEER UNDER THE LAWS OF THE STATE OF MARYLAND.
LICENSE NO. 50811 EXPIRATION DATE 06/14/2023

RK&K
700 EAST PRATT STREET, SUITE 500
BALTIMORE, MARYLAND 21202
800.787.3755

NO.	DESCRIPTION	BY	DATE
	REVISIONS		

TOWN OF EMMITSBURG, MARYLAND
NEW CREAMERY ROAD SEWAGE PUMP STATION
EMMITSBURG, MARYLAND

PUMP STATION CONTROL PANEL

ENGINEER	CHECKED BY
SMJ	DTB
DRAWN BY	DATE
SMJ	1/2023
RK&K PROJECT NUMBER	
19082	

DRAWING NUMBER
PCS7
SHEET NO. 56 OF 60

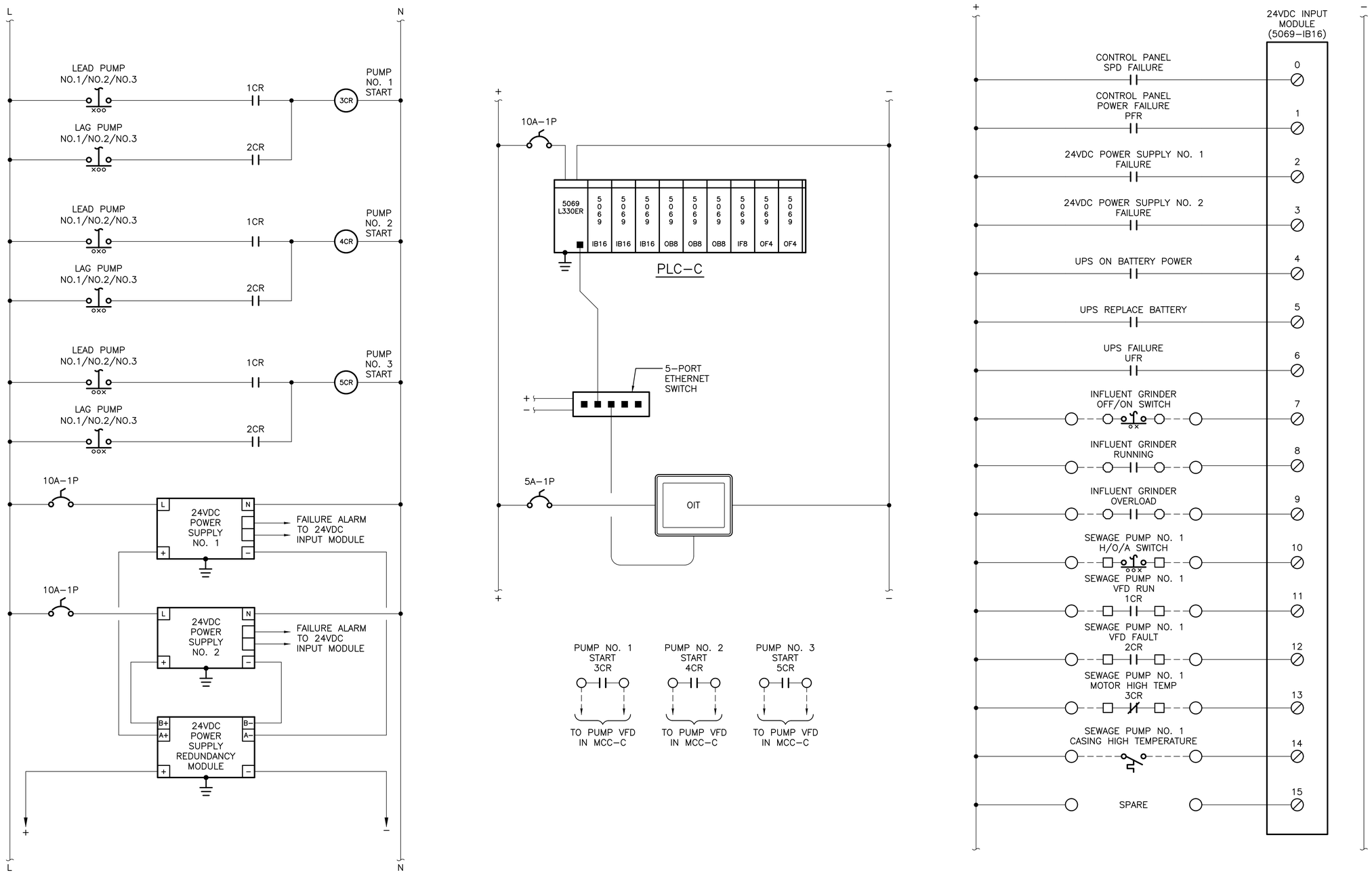

ALL DIMENSIONS AND EXISTING CONDITIONS SHALL BE CHECKED AND VERIFIED BY THE CONTRACTOR AT THE SITE.

PROFESSIONAL CERTIFICATION

I HEREBY CERTIFY THAT THESE DOCUMENTS WERE PREPARED OR APPROVED BY ME, AND THAT I AM A DULY LICENSED PROFESSIONAL ENGINEER UNDER THE LAWS OF THE STATE OF MARYLAND.

LICENSE NO. 50811 EXPIRATION DATE 06/14/2023

RK&K 700 EAST PRATT STREET, SUITE 500 BALTIMORE, MARYLAND 21202 800.787.3755

NO.	DESCRIPTION	BY	DATE
	REVISIONS		

TOWN OF EMMITSBURG, MARYLAND
NEW CREAMERY ROAD SEWAGE PUMP STATION
EMMITSBURG, MARYLAND

PUMP STATION CONTROL PANEL WIRING DIAGRAM

ENGINEER	CHECKED BY
SMJ	DTB
DRAWN BY	DATE
SMJ	1/2023
RK&K PROJECT NUMBER	
19082	

DRAWING NUMBER
PCS8
SHEET NO. 57 OF 60

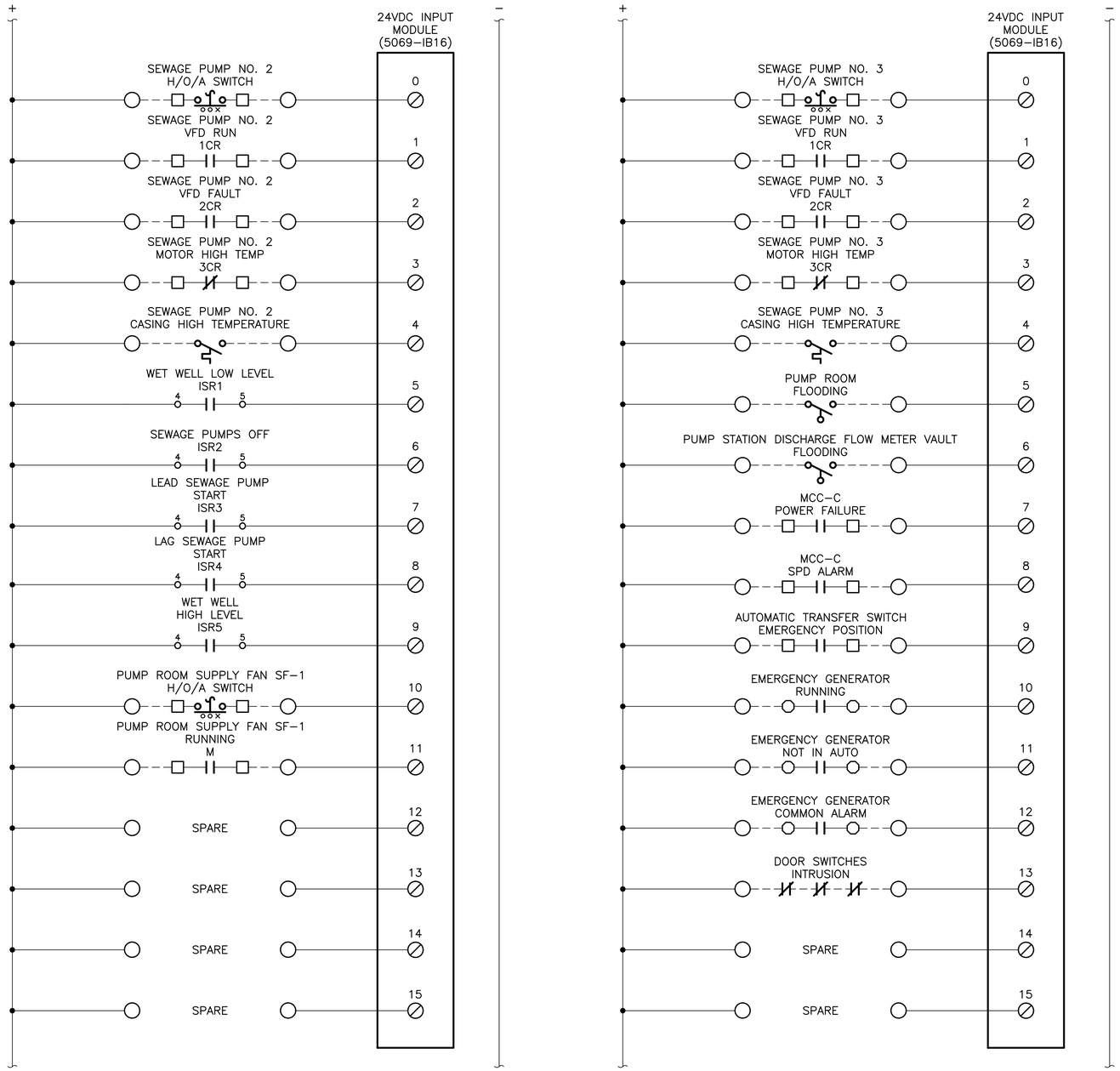

ALL DIMENSIONS AND EXISTING CONDITIONS
SHALL BE CHECKED AND VERIFIED BY THE CONTRACTOR AT THE SITE.

PROFESSIONAL CERTIFICATION

I HEREBY CERTIFY THAT THESE DOCUMENTS WERE PREPARED OR APPROVED BY ME, AND THAT I AM A DULY LICENSED PROFESSIONAL ENGINEER UNDER THE LAWS OF THE STATE OF MARYLAND.
LICENSE NO. 50811 EXPIRATION DATE 06/14/2023

RK&K
700 EAST PRATT STREET, SUITE 500
BALTIMORE, MARYLAND 21202
800.787.3755

NO.	DESCRIPTION	BY	DATE
	REVISIONS		

TOWN OF EMMITSBURG, MARYLAND
NEW CREAMERY ROAD SEWAGE PUMP STATION
EMMITSBURG, MARYLAND

PUMP STATION CONTROL PANEL
WIRING DIAGRAM

ENGINEER	CHECKED BY
SMJ	DTB
DRAWN BY	DATE
SMJ	1/2023
RK&K PROJECT NUMBER	
19082	

DRAWING NUMBER
PCS9
SHEET NO. 58 OF 60

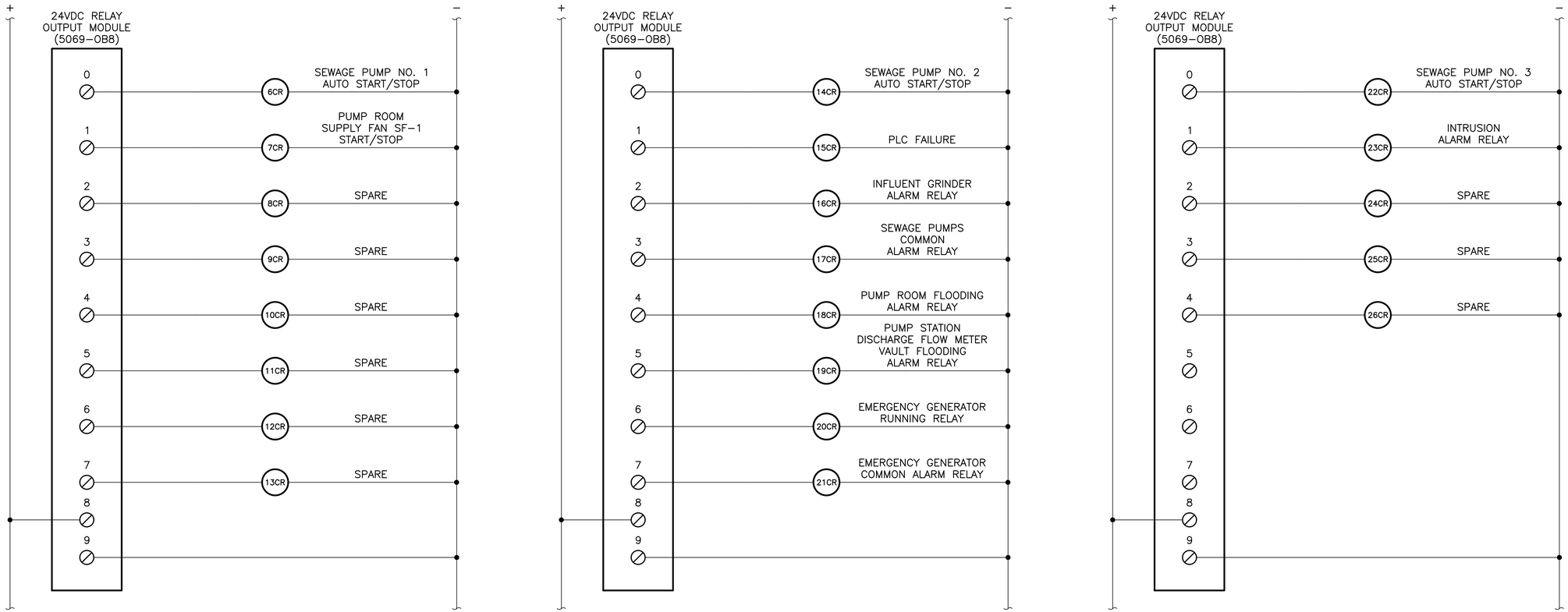

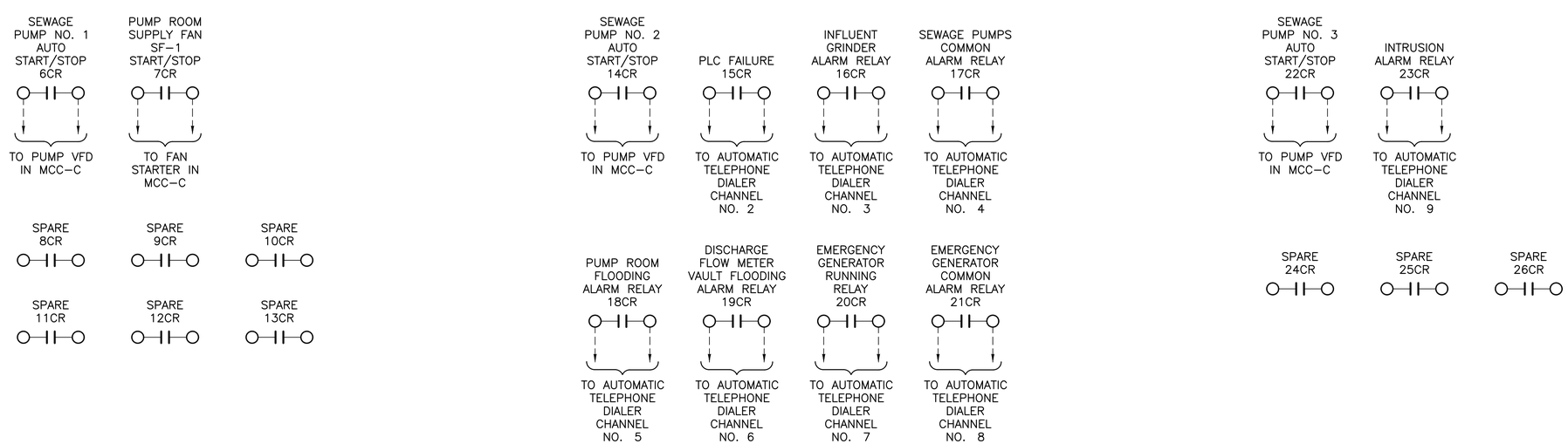

ALL DIMENSIONS AND EXISTING CONDITIONS SHALL BE CHECKED AND VERIFIED BY THE CONTRACTOR AT THE SITE.

PROFESSIONAL CERTIFICATION

I HEREBY CERTIFY THAT THESE DOCUMENTS WERE PREPARED OR APPROVED BY ME, AND THAT I AM A DULY LICENSED PROFESSIONAL ENGINEER UNDER THE LAWS OF THE STATE OF MARYLAND.
LICENSE NO. 50811 EXPIRATION DATE 06/14/2023

RK&K
700 EAST PRATT STREET, SUITE 500
BALTIMORE, MARYLAND 21202
800.787.3755

NO.	DESCRIPTION	BY	DATE
	REVISIONS		

TOWN OF EMMITSBURG, MARYLAND
NEW CREAMERY ROAD SEWAGE PUMP STATION
EMMITSBURG, MARYLAND

PUMP STATION CONTROL PANEL WIRING DIAGRAM

ENGINEER	CHECKED BY
SMJ	DTB
DRAWN BY	DATE
SMJ	1/2023
RK&K PROJECT NUMBER	
19082	

DRAWING NUMBER
PCS10
SHEET NO. 59 OF 60

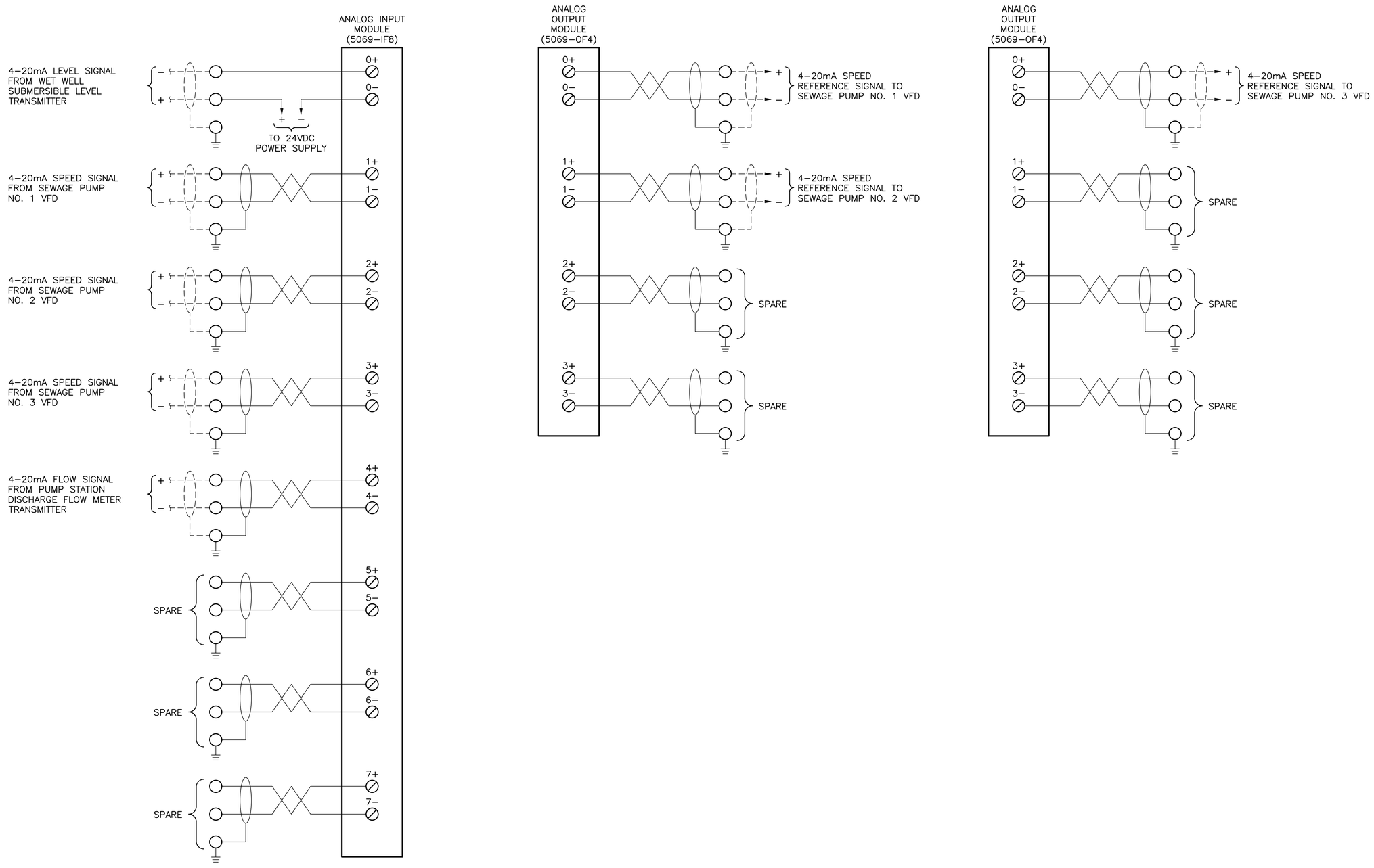

ALL DIMENSIONS AND EXISTING CONDITIONS SHALL BE CHECKED AND VERIFIED BY THE CONTRACTOR AT THE SITE.

PROFESSIONAL CERTIFICATION

I HEREBY CERTIFY THAT THESE DOCUMENTS WERE PREPARED OR APPROVED BY ME, AND THAT I AM A DULY LICENSED PROFESSIONAL ENGINEER UNDER THE LAWS OF THE STATE OF MARYLAND.
LICENSE NO. 50811 EXPIRATION DATE 06/14/2023

RK&K
700 EAST PRATT STREET, SUITE 500
BALTIMORE, MARYLAND 21202
800.787.3755

NO.	DESCRIPTION	BY	DATE
	REVISIONS		

TOWN OF EMMITSBURG, MARYLAND
NEW CREAMERY ROAD SEWAGE PUMP STATION
EMMITSBURG, MARYLAND

PUMP STATION CONTROL PANEL
WIRING DIAGRAM

ENGINEER	CHECKED BY
SMJ	DTB
DRAWN BY	DATE
SMJ	1/2023
RK&K PROJECT NUMBER	
19082	

DRAWING NUMBER
PCS11
SHEET NO. 60 OF 60